CHARACTER LCD MODULE DATASHEET

Datasheet Release Date 2017-10-24
for
CFAH2402A-NYG-JT

Crystalfontz America, Inc.
12412 East Saltese Avenue
Spokane Valley, WA 99216-0357
Phone: 888-206-9720
Fax: 509-892-1203
Email: support@crystalfontz.com
URL: www.crystalfontz.com

CONTENTS

1. General Information 3
2. Module Description 4
3. Features 4
4. Mechanical Data 4
5. Mechanical Drawing 5
6. Interface Pin Function 6
7. System Block Diagram 6
8. Absolute Maximum Ratings 7
9. Electrical Characteristics 7
10. Optical Characteristics 7
11. Character Generator ROM (CGROM) 8
12. LCD Module Precautions 9

1. General Information

Datasheet Revision History
Datasheet Release: **2017-10-24** Datasheet for the CFAH2402A-NYG-JT character LCD display module.

Product Change Notifications
You can check for or subscribe to Part Change Notices for this display module on our website.

Variations
Slight variations between lots are normal (e.g., contrast, color, or intensity).

Volatility
This display module has volatile memory.

Disclaimer
Certain applications using Crystalfontz America, Inc. products may involve potential risks of death, personal injury, or severe property or environmental damage ("Critical Applications"). CRYSTALFONTZ AMERICA, INC. PRODUCTS ARE NOT DESIGNED, INTENDED, AUTHORIZED, OR WARRANTED TO BE SUITABLE FOR USE IN LIFE-SUPPORT APPLICATIONS, DEVICES OR SYSTEMS OR OTHER CRITICAL APPLICATIONS. Inclusion of Crystalfontz America, Inc. products in such applications is understood to be fully at the risk of the customer. In order to minimize risks associated with customer applications, adequate design and operating safeguards should be provided by the customer to minimize inherent or procedural hazard. Please contact us if you have any questions concerning potential risk applications. Crystalfontz America, Inc. assumes no liability for applications assistance, customer product design, software performance, or infringements of patents or services described herein. Nor does Crystalfontz America, Inc. warrant or represent that any license, either express or implied, is granted under any patent right, copyright, or other intellectual property right of Crystalfontz America, Inc. covering or relating to any combination, machine, or process in which our products or services might be or are used. All specifications in datasheets on our website are, to the best of our knowledge, accurate but not guaranteed. Corrections to specifications are made as any inaccuracies are discovered. Company and product names mentioned in this publication are trademarks or registered trademarks of their respective owners. Copyright © 2017 by Crystalfontz America, Inc.,12412 East Saltese Avenue, Spokane Valley, WA 99216 U.S.A.

2. Module Description

This is a 24 character by 2-lines yellow-green LCD display with no backlight. This display has a built-in Sitronix ST7066U controller. The Sitronix ST7066U is compatible with the industry standard Hitachi HD44780 controller.

Please see Sitronix ST7066U LCD Controller Datasheet for further reference.

3. Features

- Built-in Controller: ST7066U (or equivalent)
- STN Positive, Yellow-green, Reflective Mode
- No Backlight
- +5v Power Supply
- 1/16 Duty
- Viewing Direction: 6 o'clock
- Operating Temperature: -20°C to +70°C
- Storage Temperature: -30°C to +80°C
- Interface: 4-Bit / 8-Bit Parallel

4. Mechanical Data

Item	Specification (mm)	Specification (inch, reference)
Overall Width and Height	118.0 (W) x 36.0 (H) x 9.5 (D)	4.646 (W) x 1.417 (H) x 0.374 (D)
Viewing Area	94.5 (W) x 16.0 (H)	3.720 (W) x 0.629 (H)
Active Area	88.3 (W) x 11.5 (H)	3.476 (W) x 0.453 (H)
Character Size	3.20 (W) x 5.55 (H)	0.126 (W) x 0.219 (H)
Character Pitch	3.70 (W) x 5.95 (H)	0.146 (W) x 0.234 (H)
Dot Size	0.60 (W) x 0.65 (H)	0.024 (W) x 0.026 (H)
Dot Pitch	0.65 (W) x 0.70 (H)	0.026 (W) x 0.028 (H)
Weight (Typical)	40 grams	1.41 ounces

5. Mechanical Drawing

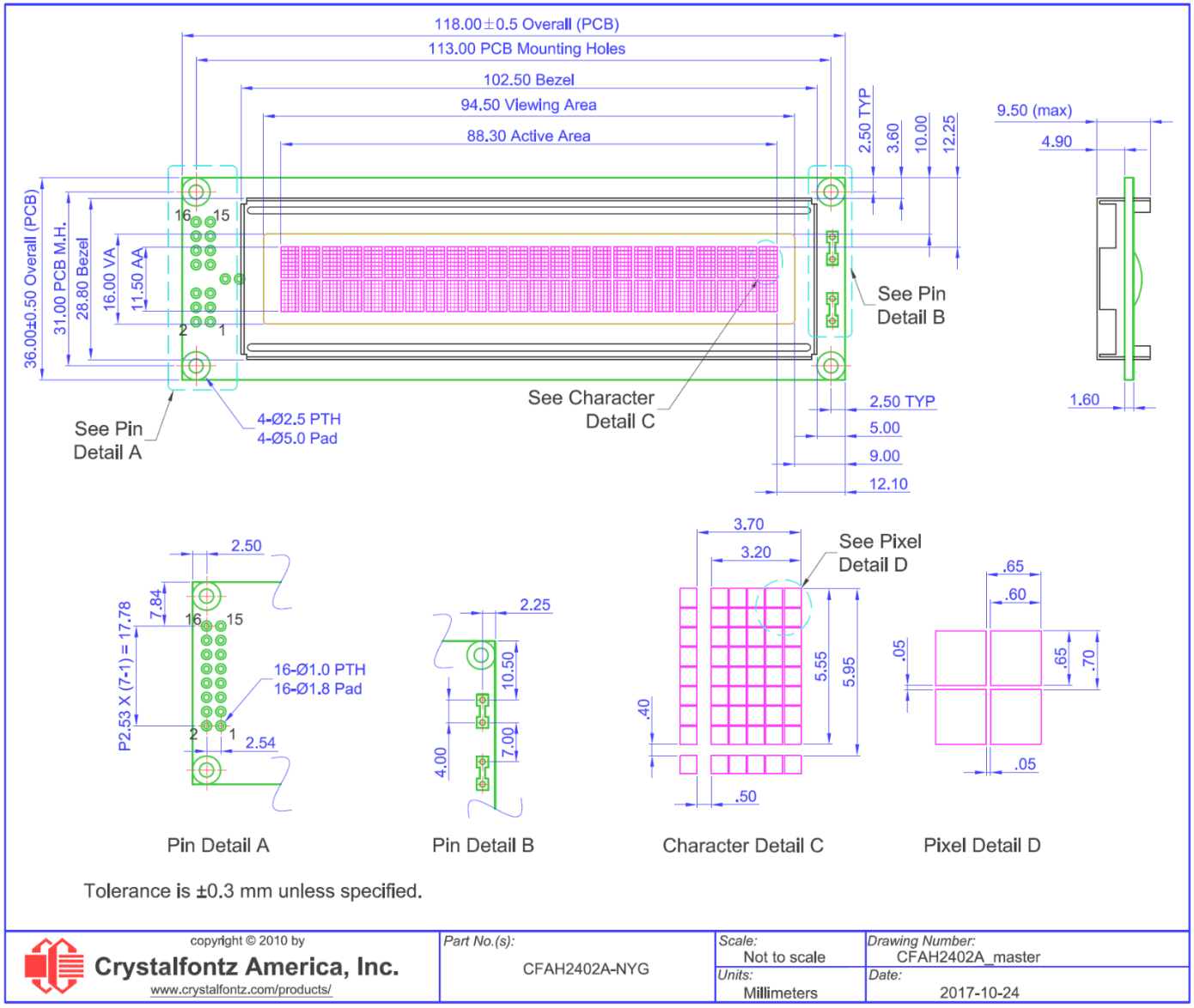

6. Interface Pin Function

Pin No.	Symbol	Level	Function
1	V_{SS}	0v	Ground
2	V_{DD}	5.0v	Supply Voltage for Logic
3	V_O	(variable)	Supply Voltage for LCD
4	RS	H/L	H: Data L: Instruction Code
5	R/W	H/L	H: Read L: Write
6	E	H, H → L	Chip Enable Signal
7	DB0	H/L	Data Bus Line
8	DB1	H/L	Data Bus Line
9	DB2	H/L	Data Bus Line
10	DB3	H/L	Data Bus Line
11	DB4	H/L	Data Bus Line
12	DB5	H/L	Data Bus Line
13	DB6	H/L	Data Bus Line
14	DB7	H/L	Data Bus Line
15	NC	-	No Connection
16	NC	-	No Connection

7. System Block Diagram

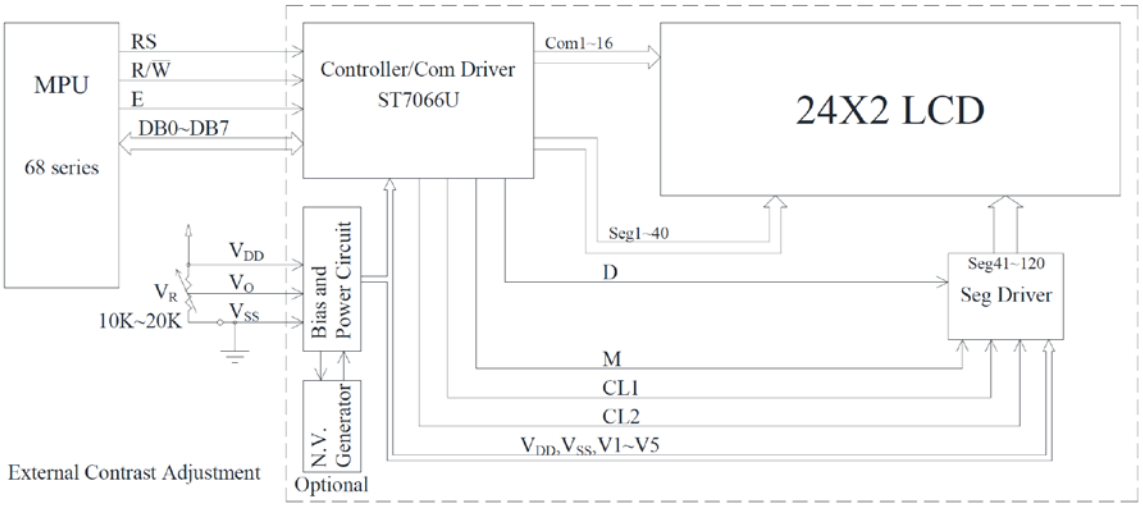

8. Absolute Maximum Ratings

Parameter	Symbol	Min	Typ	Max	Unit	Notes
Supply Voltage for Logic	V_{DD} -V_{SS}	-0.3	-	7	V	(1)(2)
Supply Voltage for LCD	V_{DD} -V_O	-0.3	-	13	V	(1)(2)
Input Voltage	V_I	V_{SS}	-	V_{DD}	V	-
Operating Temperature	T_{OP}	-20	-	+70	°C	-
Storage Temperature	T_{ST}	-30	-	+80	°C	-

Notes:
(1) These are stress ratings only. Extended exposure to the absolute maximum ratings listed above may affect device reliability or cause permanent damage.
(2) Functional operation should be restricted to the limits in the Electrical Characteristics table below.

9. Electrical Characteristics

Item	Symbol	Condition	Min	Typ	Max	Unit
Supply Voltage for Logic	V_{DD} -V_{SS}	-	4.5	5.0	5.5	V
Supply Voltage for LCD	V_{DD} -V_O	Ta=20°C	-	-	5.5	V
		Ta=25°C	4.2	4.35	4.5	V
		Ta=70°C	3.8	-	-	V
High-level Input	V_{IH}	-	0.7 V_{DD}	-	V_{DD}	V
Low-level Input	V_{IL}	-	V_{SS}	-	0.6	V
High-level Output	V_{OH}	-	3.9	-	V_{DD}	V
Low-level Output	V_{OL}	-	0	-	0.4	V
Supply Current	I_{DD}	V_{DD} = 5.0V	1.0	1.2	1.5	mA

10. Optical Characteristics

Item	Symbol	Condition	Min	Typ	Max	Unit
View Angle	θ	CR≧2	0	-	20	ϕ = 180°
	θ	CR≧2	0	-	40	ϕ = 0°
	θ	CR≧2	0	-	30	ϕ = 90°
	θ	CR≧2	0	-	30	ϕ = 270°
Contrast Ratio	CR	-	-	3	-	-
Response Time	T rise	-	-	150	200	ms
	T fall	-	-	150	200	ms

11. Character Generator ROM (CGROM)

Upper 4 bit / Lower 4 bit	LLLL	LLLH	LLHL	LLHH	LHLL	LHLH	LHHL	LHHH	HLLL	HLLH	HLHL	HLHH	HHLL	HHLH	HHHL	HHHH
LLLL	CG RAM (1)															
LLLH	(2)															
LLHL	(3)															
LLHH	(4)															
LHLL	(5)															
LHLH	(6)															
LHHL	(7)															
LHHH	(8)															
HLLL	(1)															
HLLH	(2)															
HLHL	(3)															
HLHH	(4)															
HHLL	(5)															
HHLH	(6)															
HHHL	(7)															
HHHH	(8)															

12. LCD Module Precautions

The precautions below should be followed when using LCD modules to help ensure personal safety, module performance, and compliance of environmental regulations.

12.1. Modules

- Avoid applying excessive shocks to module or making any alterations or modifications to it.
- Do not make extra holes on the printed circuit board, modify its shape or change the components of LCD display module.
- Do not disassemble the LCD display module.
- Do not operate the LCD display module above the absolute maximum rating.
- Do not drop, bend or twist the LCD display module.
- Soldering: only to the I/O terminals.
- Store in an anti-static electricity container and clean environment.
- It is common to use the "screen saver" to extend the lifetime of the LCD display module.
  - Do not use the fixed information for long periods of time in real application.
  - Do not use fixed information in LCD panel for long periods of time to extend "screen burn" effect time.
- Crystalfontz has the right to change the passive components, including R3, R6 & backlight adjust resistors. (Resistors, capacitors and other passive components will have different appearance and color caused by the different supplier.)
- Crystalfontz have the right to change the PCB Rev. (In order to satisfy the supplying stability, management optimization and the best product performance, etc., under the premise of not affecting the electrical characteristics and external dimensions, Crystalfontz has the right to modify the version.).

12.2. Handling Precautions

- Since the display panel is made of glass, do not apply mechanical impacts such as dropping from a high position.
- If the display panel is accidently broken, and the internal organic substance leaks out, be careful not to inhale or touch the organic substance.
- If pressure is applied to the display surface or its neighborhood of the LCD display module, the cell structure may be damaged, so be careful not to apply pressure to these sections.
- The polarizer covering the surface of the LCD display module is soft and can be easily scratched. Please be careful when handling the LCD display module.
- Clean the surface of the polarizer covering the LCD display module if it becomes soiled using following adhesion tape.
  - Scotch Mending Tape No. 810 or an equivalent
  - Never breathe the soiled surface or wipe the surface using a cloth containing solvent such as ethyl alcohol, since the surface of the polarizer will become cloudy.
  - The following liquids/solvents may spoil the polarizer:
    - Water
    - Ketone
    - Aromatic Solvents
- Hold the LCD display module very carefully when placing the LCD display module into the system housing.
- Do not apply excessive stress or pressure to the LCD display module. And, do not over bend the film with electrode pattern layouts. These stresses will influence the display performance. Also, be sure to secure the sufficient rigidity for the outer cases.

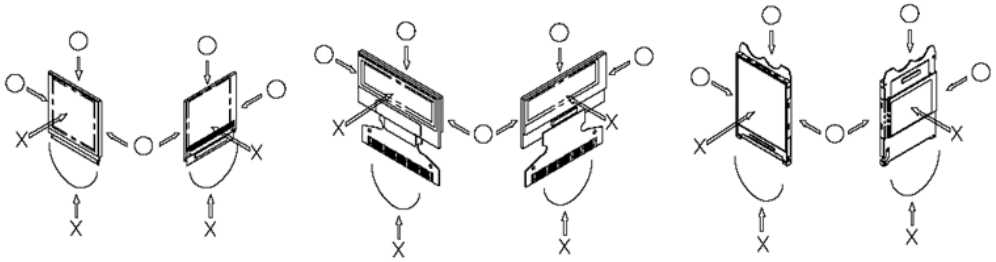

- Do not apply stress to the LSI chips and the surrounding molded sections.
- Do not disassemble or modify the LCD display module.
- Do not apply input signals while the logic power is off.
- Pay sufficient attention to the working environments when handing the LCD display module to prevent occurrence of element breakage accidents by static electricity.
    - Be sure to make human body grounding when handling LCD display modules.
    - Be sure to ground tools to use for assembly such as soldering irons.
    - To suppress generation of static electricity, avoid carrying out assembly work under dry environments.
    - Protective film is being applied to the surface of the display panel of the LCD display module. Be careful since static electricity may be generated when exfoliating the protective film.
- Protection film is being applied to the surface of the display panel and removes the protection film before assembling it. At this time, if the LCD display module has been stored for a long period of time, residue adhesive material of the protection film may remain on the surface of the display panel after the film has been removed. In such a case, remove the residue material by the method discussed above.
- If electric current is applied when the LCD display module is being dewed or when it is placed under high humidity environments, the electrodes may become corroded. If this happens proceed with caution when handling the LCD display module.

12.3. Storage Precautions

- When storing the LCD display modules put them in static electricity preventive bags to avoid exposure to direct sunlight and fluorescent lamps. Also avoid high temperature and high humidity environments and low temperatures (less than 0°C) environments. (We recommend you store these modules in the packaged state when they were shipped from Crystalfontz). Be careful not to let water drops adhere to the packages or bags, and do not let dew gather on them.
- If electric current is applied when water drops are adhering to the surface of the LCD display module the LCD display module may have become dewed. If a dewed LCD display module is placed under high humidity environments it may cause the electrodes to become corroded. If this happens proceed with caution when handling the LCD display module.

12.4. Designing Precautions

- The absolute maximum ratings are the ratings that cannot be exceeded for LCD display module. If these values are exceeded, panel damage may happen.
- To prevent occurrence of malfunctioning by noise pay attention to satisfy the V_{IL} and V_{IH} specifications and, at the same time, to make the signal line cable as short as possible.
- We recommend that you install excess current preventive unit (fuses, etc.) to the power circuit (V_{DD}). (Recommend value: 0.5A)
- Pay sufficient attention to avoid occurrence of mutual noise interference with the neighboring devices.
- As for EMI, take necessary measures on the equipment side.
- When fastening the LCD display module, fasten the external plastic housing section.
- If the power supply to the LCD display module is forcibly shut down, by such errors as taking out the main battery while the LCD display panel is in operation, we cannot guarantee the quality of this LCD display module.
    - Connection (contact) to any other potential than the above may lead to rupture of the IC.

12.5. Disposing Precautions

- Request the qualified companies to handle the industrial wastes when disposing of the LCD display modules. Or, when burning them, be sure to observe the environmental and hygienic laws and regulations.

12.6. Other Precautions

- When an LCD display module is operated for a long period of time with a fixed pattern, the fixed pattern may remain as an after image or a slight contrast deviation may occur.
    - If the operation is interrupted and left unused for a while, normal state can be restored.
    - This will not cause a problem in the reliability of the module.
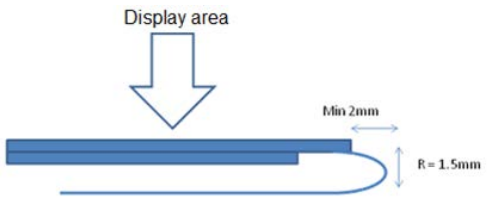
- To protect the LCD display module from performance drops by static electricity rapture, etc., do not touch the following sections whenever possible while handling the LCD display modules.
  - Pins and electrodes
  - Pattern layouts such as the TCP & FPC
- With this LCD display module, the LCD driver is being exposed. Generally speaking, semiconductor elements change their characteristics when light is radiated according to the principle of the solar battery. Consequently, if this LCD driver is exposed to light, malfunctioning may occur.
  - Design the product and installation method so that the LCD driver may be shielded from light in actual usage.
  - Design the product and installation method so that the LCD driver may be shielded from light during the inspection processes.
- Although this LCD display module stores the operation state data by the commands and the indication data, when excessive external noise, etc. enters into the module, the internal status may be changed. Therefore, it is necessary to take appropriate measures to suppress noise generation or to protect from influences of noise on the system design.
- We recommend that you construct its software to make periodical refreshment of the operation statuses (re-setting of the commands and re-transference of the display data), to cope with catastrophic noise.
- Resistors, capacitors, and other passive components will have different appearance and color caused by the different supplier.
- Crystalfontz has the right to upgrade and modify the product function.
- The limitation of FPC bending: