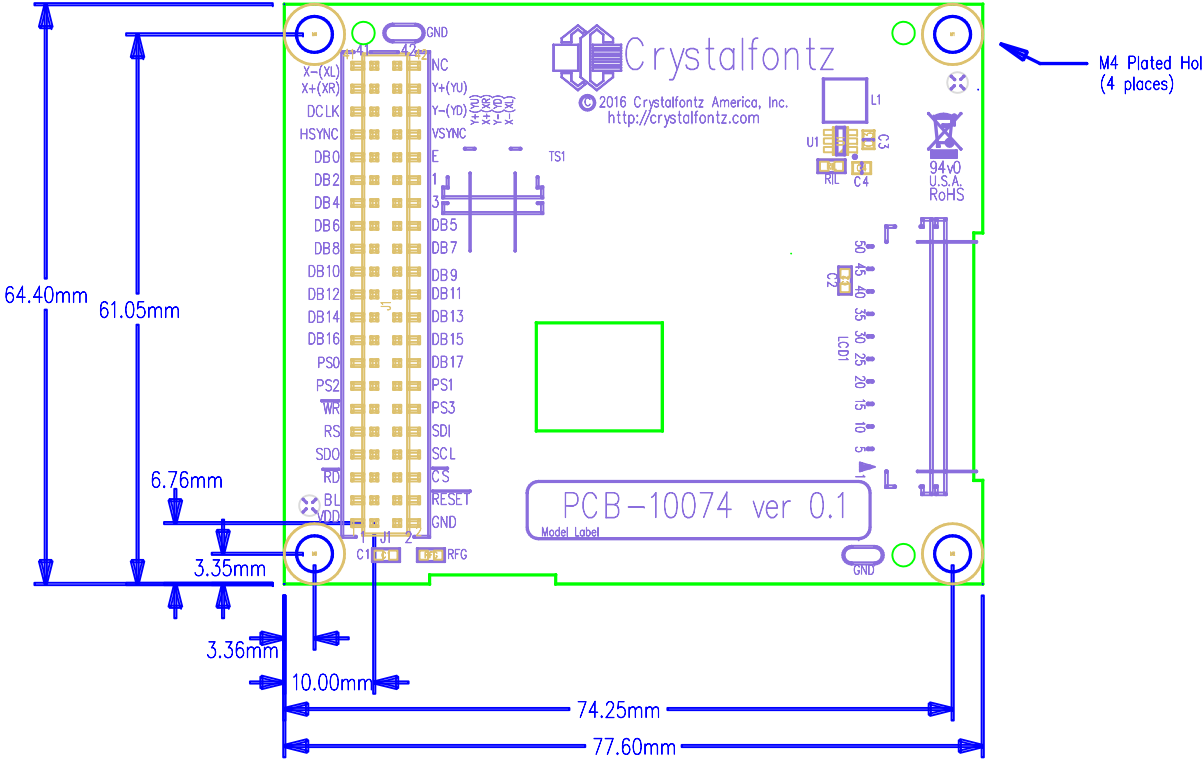
M4 Plated Hole
(4 places)
64.40mm
61.05mm
6.76mm
3.35mm
3.36mm
10.00mm
74.25mm
77.60mm
Crystalfontz
© 2016 Crystalfontz America, Inc.
http://crystalfontz.com
PCB-10074 ver 0.1
Model Label
GND
X-(XL)
X+(XR)
DCLK
HSYNC
DB0
DB2
DB4
DB6
DB8
DB10
DB12
DB14
DB16
PS0
PS2
WR
RS
SDO
RD
BL
VDD
NC
Y+(YU)
Y-(YD)
VSYNC
E
DB5
DB7
DB9
DB11
DB13
DB15
DB17
PS1
PS3
SDI
SCL
CS
RESET
RFG
TS1
J1
C1
U1
RIL
C3
C4
L1
C2
LCD1
94v0
U.S.A.
RoHS