CFAG12864G-YYH Series Millimeter Dimensions

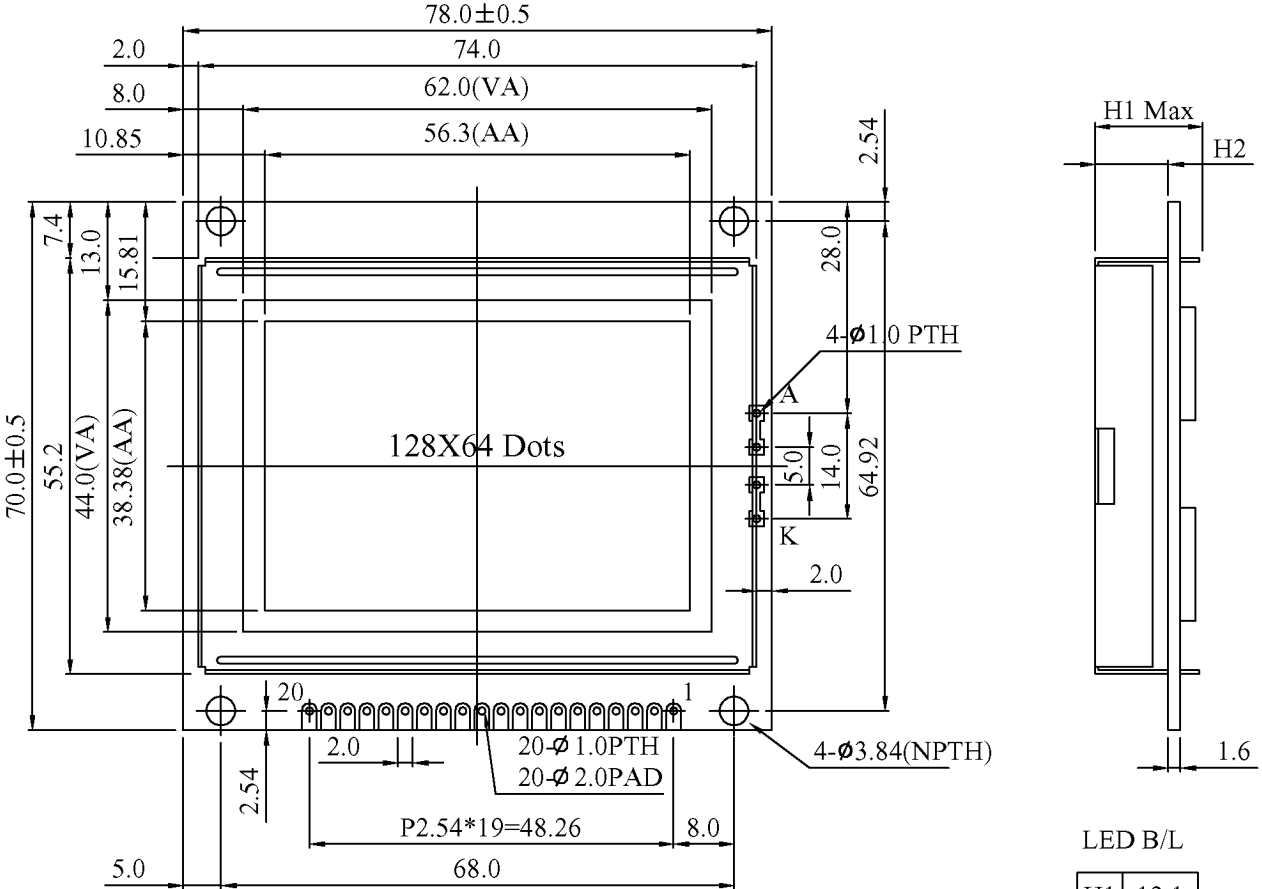

The non-specified tolerance of dimension is ±0.3 mm .

LED B/L

H1	12.1
H2	7.5