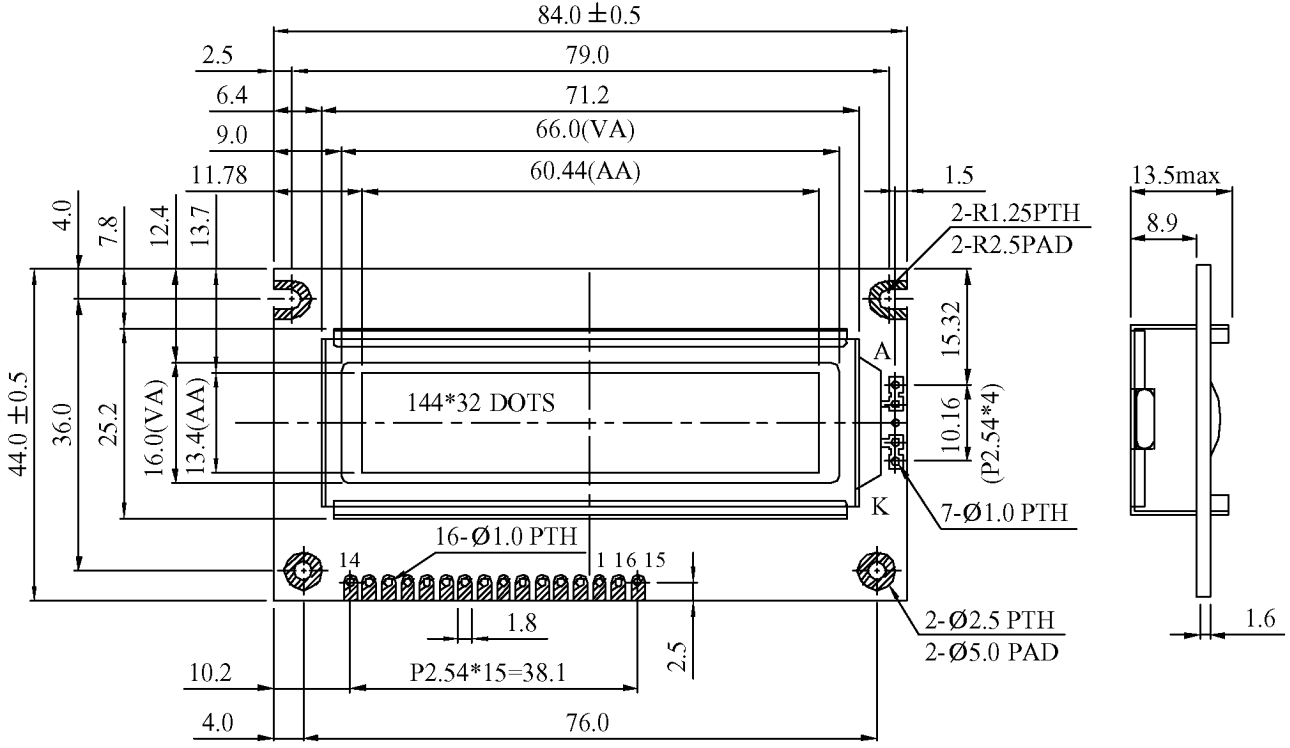CFAG14432C Series Millimeter Dimensions