REV	ENGINEER	DATE	REMARKS
0.0	BAC	2015-08-31	Initial Creation
0.1	BAC	2015-08-24	Mnt Standoffs, +1 BL Jumper, HPM pol
-	-	-	-
-	-	-	-
-	-	-	-

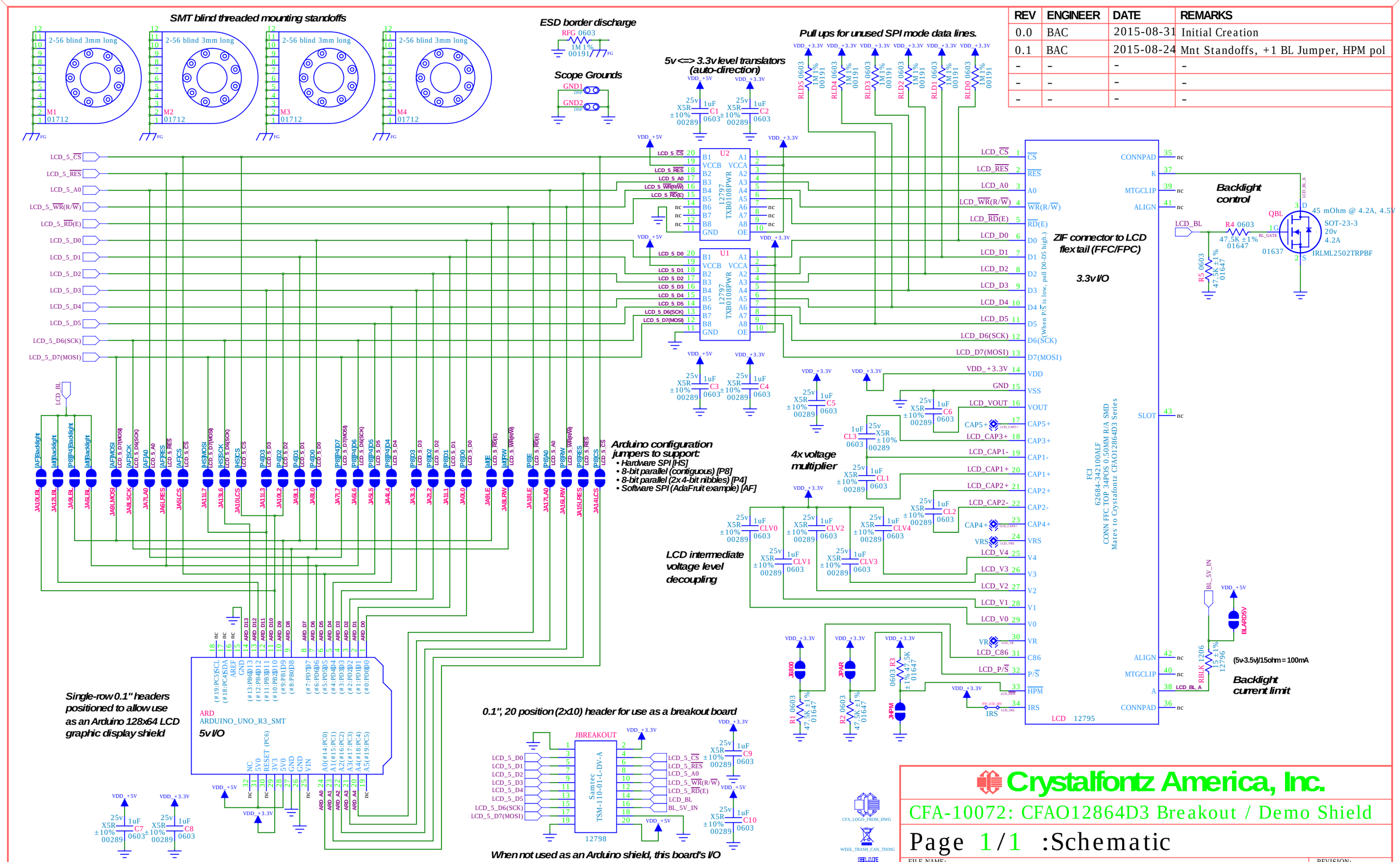

Crystalfontz America, Inc.

CFA-10072: CFAO12864D3 Breakout / Demo Shield

Page 1/1 :Schematic

FILE NAME: CFA_10072_Schematic_0v1.pdf

REVISION: 0.1