Specification

For

LCD Module

MODULE:	CFAF176220M-T
CUSTOMER:	

REV	DESCRIPTION	DATE
3.5	FIRST ISSUE	2008.06.17

	INITIAL	DATE
APREPARED BY		2008.06.11
CHECKED BY		
APPROVED BY		

CUSTOMER	INITIAL	DATE
APPROVED BY		

Revision History

Data	Rev. No.	Page	Summary
2008.06.11	3.4		Rev3.4 was issued.

Contents

General Description

* Description

This is a color active matrix TFT (Thin Film Transistor) liquid crystal display (LCD) that uses amorphous silicon TFT as a switching devices. This model is composed of a Transmissive type TFT-LCD Panel, driver circuit ,back-light unit. The resolution of a 2.0" TFT-LCD contains 176 x 22 0 pixels, and can display up to 262K colors.

* Features

-Low Input Voltage : VCC : 2.8V
-Display Colors of TFT LCD : 262K colors
-CPU Interface : 8080 parallel 8 bit
-Internal Power Supply Circuit.

General Information Items	Specification	Unit	Note
	Main Panel		
Display area(AA)	31.68(H) *39.60(V) (2.0 inch)	mm	-
Driver element	a-Si TFT active matrix	-	-
Display colors	262K	colors	-
Number of pixels	176(RGB) *220	dots	-
Pixel arrangement	RGB vertical stripe	-	-
Pixel pitch	0.18(H) *0.18(V)	mm	-
Viewing angle	12	o'clock	-
Drive IC	ST7773	-	-
Display mode	Transmissive/ Normally White	-	-
Operating temperature	-20～+70℃	-	-
Storage temperature	-30～+80℃	-	-

- **Mechanical Information**

Item		Min.	Typ.	Max.	Unit	Note
Module size	Horizontal(H)	38.20	38.40	38.60	mm	-
	Vertical(V)	-	51.40	-	mm	-
	Depth(D)	2.25	2.35	2.45	mm	-
Weight		-	10	-	g	-

1. Optical Characteristics

The following items are measured under stable conditions. The optical characteristics should be measured in a dark room or equivalent state with the methods shown in Note (1).
Measuring equipment: LCD-7200, BM-5A, BM-7, PR-650, EZ-Contrast

ITEM		SYMBOL	CONDITION	MIN.	TYP.	MAX.	UNIT	REMARK
Transmittance		T%			6.6			
Contrast Ratio		CR			300	-		Note 3
Response Time		Tr	θ = ψ = 0°	-	12	-	ms	Note 4
		Tf		-	18	-	ms	
View angle	Upper	θ	CR≧10	-	40	-	°	Note 5
	Lower			-	20	-	°	
	Left	ϕ		-	45	-	°	
	Right			-	45	-	°	
Color Filter Chromacicity	R	x	θ = ψ = 0°	0.635	0.655	0.675		Note 6
		y		0.309	0.329	0.349		
		Y		16.0	19.0	22.0		
	G	x		0.292	0.312	0.332		
		y		0.555	0.575	0.595		
		Y		56.0	60.0	64.0		
	B	x		0.114	0.134	0.154		
		y		0.115	0.135	0.155		
		Y		12.5	15.5	18.5		
	W	x		0.290	0.310	0.330		
		y		0.321	0.341	0.361		
		Y		27.5	31.5	35.5		
	NTSC	(%)			58			

*

Measuring equipment : BM-7
Note (1) If product is exposed to high temperatures for extended time, there is a possibility of the polarizer film damage which could degrade the optical characteristics.

Note (2) Definition of Contrast Ratio (CR):

$$CR = \frac{\text{Luminance (brightness) all pixels "White"}}{\text{Luminance (brightness) all pixels "dark"}}$$

Note (3). Definition of Viewing Angle (θx, θy):

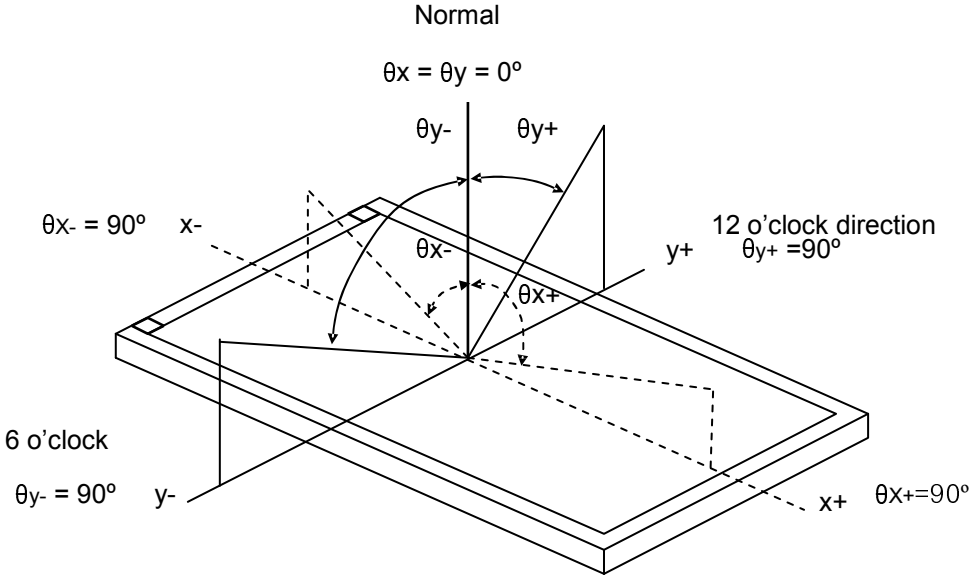

Note (4) Definition of Response Time (TR, TF):

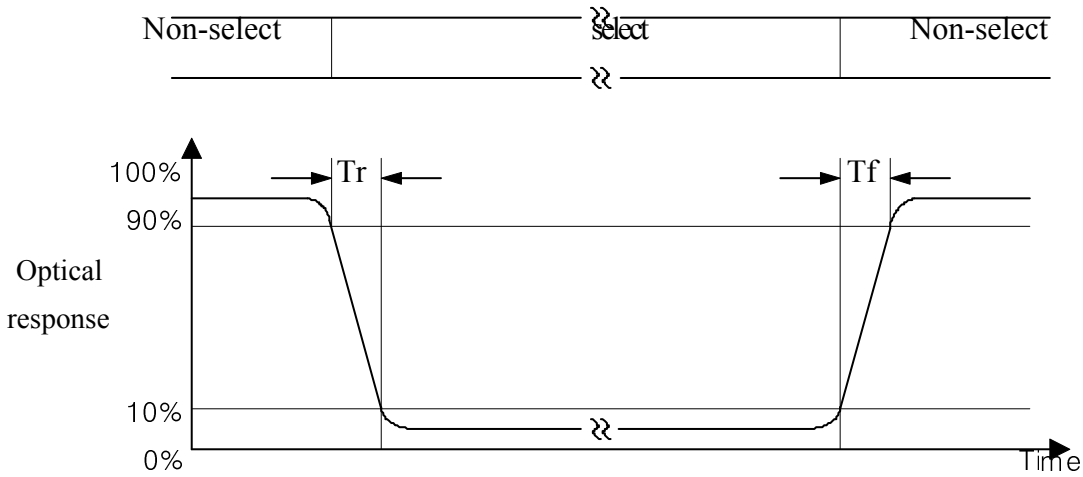

Note (5) Measurement Set-Up: Measure after lighting Backlight for 30 minutes in a windless room.

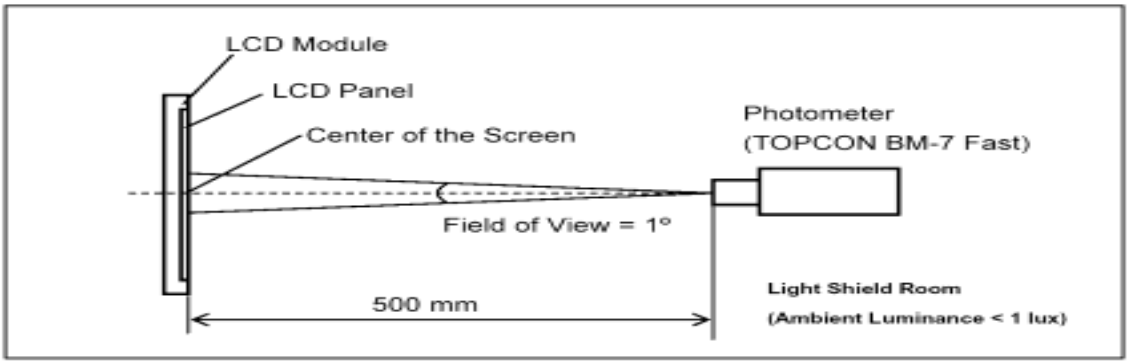

2. Electrical Characteristics

2.1 ABSOLUTE MAXIMUM RATING(Ta=25 VSS=0V)

Characteristics	Symbol	Min.	Typ.	Max.	Unit	Note
SYSTEM voltage	V_{cc}	-0.3	2.8	+4.6	V	-
Supply voltage (Digital)	VCCIO	-0.3	-	+4.6	V	-
Supply voltage (Logic)	VCCIO	-0.3	-	+4.6	V	-
Operating temperature	T_{OP}	-20	-	+70	℃	1,
Storage temperature	T_{ST}	-30	-	+80	℃	2

Note1: Background color changes slightly depending on ambient temperature. This phenomenonis reversible. Ta70℃: 75%RH max

Ta>70℃: absolute humidity must be lower than the humidity of 75%RH at 70℃

Note2: Ta at −30℃will be <48hrs, at 80℃ will be <120hrs

2.2 DC Electrical Characteristics

Characteristics	Symbol	Min.	Typ.	Max.	Unit	Note
SYSTEM voltage	V_{cc}	2.7	2.8	3.5	V	-
Digital & Logic operation Supply voltage	VCCIO	1.6	1.8	-	V	-
Normal mode Current consumption	VCC	-	2.5	5	mA	-
	VCCIO	-	0.01	0.05	mA	-
Sleep-in mode Current consumption	VCC_I	-	2	5	uA	-
	VCCIO	-	8	15	uA	-
Level input voltage	V_{IH}	0.7 VCCIO	-	VCCIO	V	-
	V_{IL}	V_{SS}	-	0.3 VCCIO	V	-
Level output voltage	V_{OH}	V_{SS}	-	VCCIO	V	-
	V_{OL}	V_{SS}	-	0.2 VCCIO	V	-

2.3 LED Backlight Characteristics

The back-light system is edge-lighting type with 3chips White LED in parallel

Item	Symbol	Min.	Typ.	Max.	Unit	Note
Forward Current	I_F	-	45	60	mA	15mAx3
Forward Voltage	V_F	3.0	3.2	3.4	V	-
LCM Luminance	L_V	165	200	-	cd/m2	I_B=45mA
Uniformity	A_{Vg}	80	-	-	%	-

Crystalfontz America, Inc.
12412 E. Saltese Ave
Spokane Valley, WA 99216

http://www.crystalfontz.com
sales@crystalfontz.com

1-888-206-9720
1-509-892-1200

3. Block Diagram

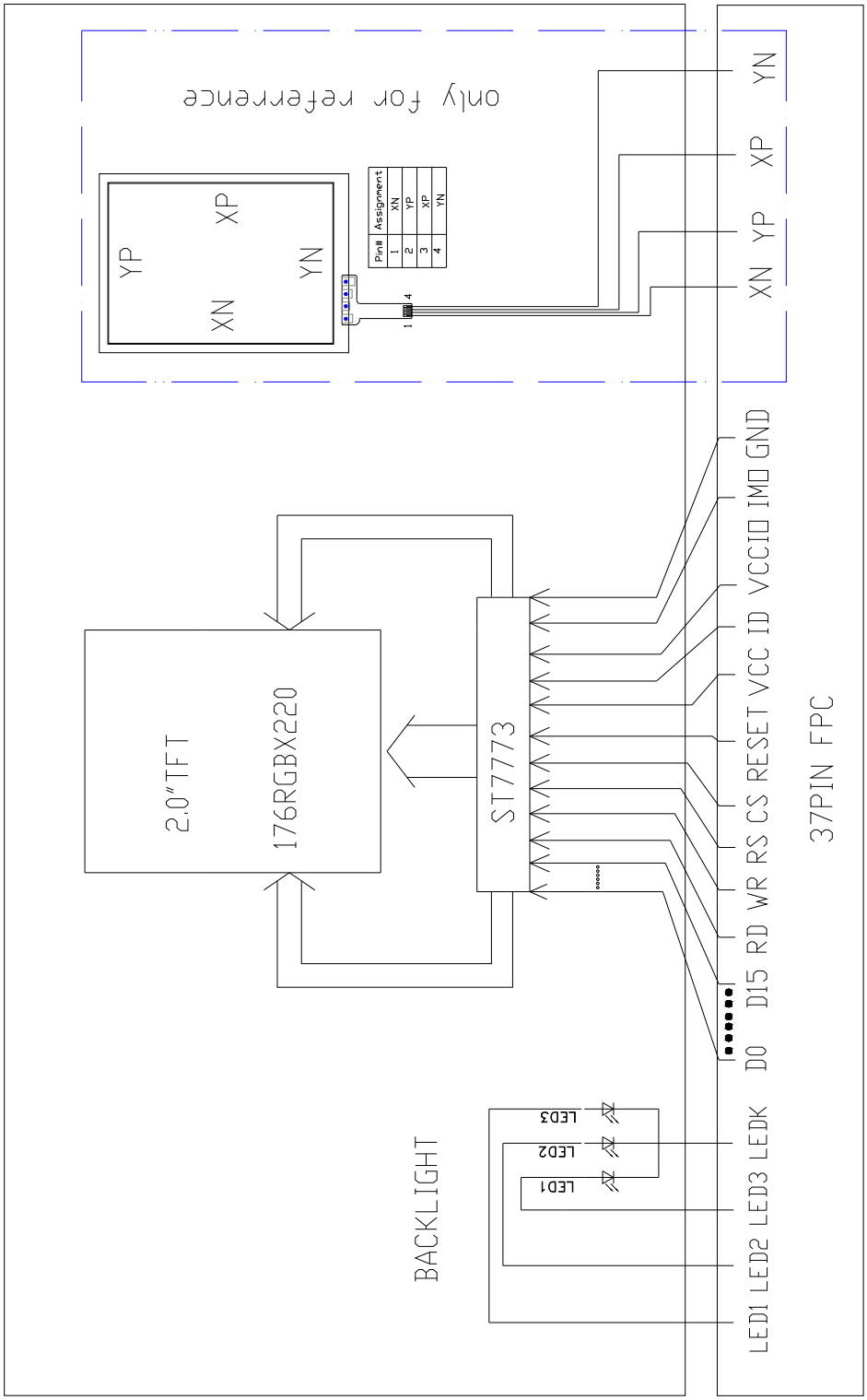

4. Input terminal Pin Assignment

4.1 Input signal & Power

Pin NO.	Symbol	Level	Function
1	GND		Ground
2	NC		-
3	RESET		Reset signal pin
4--11	NC		
12--19	DB0-DB7		Parallel 8bit Bus
20	RD		parallel 8bit Read enable signal
21	WR		parallel 8bit Write enable signal
22	RS		Select data or command
23	CS		Chip select signal
24	VCC		System Operating voltage
25	GND		Ground
26	VCCIO		Interface power(I/O supply voltage)
27	NC		NC
28	XN		Touch panel coordinate(Right)
29	YP		Touch panel coordinate(Up)
30	XP		Touch panel coordinate(Left)
31	YN		Touch panel coordinate(Down)
32	GND		Ground
33	LED1+		Backlight , Anode1
34	LED2+		Backlight , Anode2
35	LED3+		Backlight , Anode3
36	NC		
37	LED-		Backlight , Cathode

4.2 Input Signal, Basic Display Colors and Gray scale of Each Colors

COLOR	Display	RED						GREEN						BLUE						GRAY SCALE LEVEL
		R0	R1	R2	R3	R4	R5	G0	G1	G2	G3	G4	G5	B0	B1	B2	B3	B4	B5	
BASIC COLOR	BLACK	0	0	0	0	0	0	0	0	0	0	0	0	0	0	0	0	0	0	-
	BLUE	0	0	0	0	0	0	0	0	0	0	0	0	1	1	1	1	1	1	-
	GREEN	0	0	0	0	0	0	1	1	1	1	1	1	0	0	0	0	0	0	-
	CYAN	0	0	0	0	0	0	1	1	1	1	1	1	1	1	1	1	1	1	-
	RED	1	1	1	1	1	1	0	0	0	0	0	0	0	0	0	0	0	0	-
	MAGENTA	1	1	1	1	1	1	0	0	0	0	0	0	1	1	1	1	1	1	-
	YELLOW	1	1	1	1	1	1	1	1	1	1	1	1	0	0	0	0	0	0	-
	WHITE	1	1	1	1	1	1	1	1	1	1	1	1	1	1	1	1	1	1	-
GRAY SCALE OF RED	BLACK	0	0	0	0	0	0	0	0	0	0	0	0	0	0	0	0	0	0	R0
	DARK	1	0	0	0	0	0	0	0	0	0	0	0	0	0	0	0	0	0	R1
	↑	0	1	0	0	0	0	0	0	0	0	0	0	0	0	0	0	0	0	
		:	:	:	:	:	:	:	:	:	:	:	:	:	:	:	:	:	:	R3~R60
		:	:	:	:	:	:	:	:	:	:	:	:	:	:	:	:	:	:	
	↓	1	0	1	1	1	1	0	0	0	0	0	0	0	0	0	0	0	0	R61
	LIGHT	0	1	1	1	1	1	0	0	0	0	0	0	0	0	0	0	0	0	R62
	RED	1	1	1	1	1	1	0	0	0	0	0	0	0	0	0	0	0	0	R63
GRAY SCALE OF GREEN	BLACK	0	0	0	0	0	0	0	0	0	0	0	0	0	0	0	0	0	0	G0
	DARK	0	0	0	0	0	0	1	0	0	0	0	0	0	0	0	0	0	0	G1
	↑	0	0	0	0	0	0	0	1	0	0	0	0	0	0	0	0	0	0	G2
		:	:	:	:	:	:	:	:	:	:	:	:	:	:	:	:	:	:	G3~G60
		:	:	:	:	:	:	:	:	:	:	:	:	:	:	:	:	:	:	
	↓	0	0	0	0	0	0	1	0	1	1	1	1	0	0	0	0	0	0	G61
	LIGHT	0	0	0	0	0	0	0	1	1	1	1	1	0	0	0	0	0	0	G62
	GREEN	0	0	0	0	0	0	1	1	1	1	1	1	0	0	0	0	0	0	G63
GRAY SCALE OF BLUE	BLACK	0	0	0	0	0	0	0	0	0	0	0	0	0	0	0	0	0	0	B0
	DARK	0	0	0	0	0	0	0	0	0	0	0	0	1	0	0	0	0	0	B1
	↑	0	0	0	0	0	0	0	0	0	0	0	0	0	1	0	0	0	0	B2
		:	:	:	:	:	:	:	:	:	:	:	:	:	:	:	:	:	:	B3~B60
		:	:	:	:	:	:	:	:	:	:	:	:	:	:	:	:	:	:	
	↓	0	0	0	0	0	0	0	0	0	0	0	0	1	0	1	1	1	1	B61
	LIGHT	0	0	0	0	0	0	0	0	0	0	0	0	0	1	1	1	1	1	B62
	BLUE	0	0	0	0	0	0	0	0	0	0	0	0	1	1	1	1	1	1	B63

Note) Defintion of Gray :

Rn: Red Gray, Gn : Green Gray, Bn: Blue Gray (n = Gray level)

Input Signal : 0 = Low level voltage , 1 = High level votage

5. Operating Principle & Methods

Please refer to ST7773 datasheet for more details.

80-System Interface Timing Characteristics

Normal Write Mode (IOVCC = 1.65~3.3V, VCC=2.4~3.3V)

Item		Symbol	Unit	Min.	Typ.	Max.	Test Condition
Bus cycle time	Write	t_{CYCW}	ns	100	-	-	-
	Read	t_{CYCR}	ns	300	-	-	-
Write low-level pulse width		PW_{LW}	ns	50	-	500	-
Write high-level pulse width		PW_{HW}	ns	50	-	-	-
Read low-level pulse width		PW_{LR}	ns	150	-	-	-
Read high-level pulse width		PW_{HR}	ns	150	-	-	
Write / Read rise / fall time		t_{WRr}/t_{WRf}	ns	-	-	25	
Setup time	Write (RS to nCS, E/nWR)	t_{AS}	ns	10	-	-	
	Read (RS to nCS, RW/nRD)			5	-	-	
Address hold time		t_{AH}	ns	5	-	-	
Write data set up time		t_{DSW}	ns	10	-	-	
Write data hold time		t_H	ns	15	-	-	
Read data delay time		t_{DDR}	ns	-	-	100	
Read data hold time		t_{DHR}	ns	5	-	-	

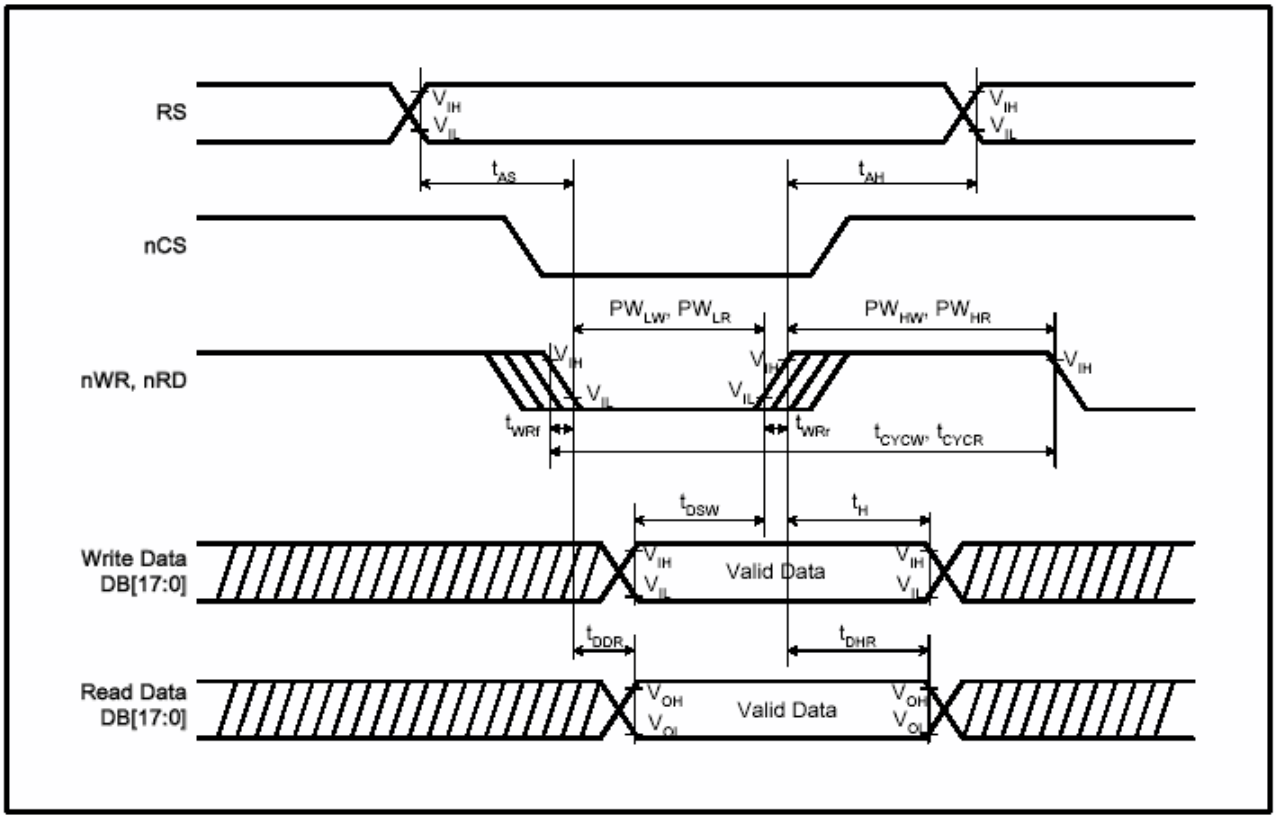

PRELIMINARY

Figure 5.1 **80 SYSTEM BUS TIMING**

5.2 RESET TIMING

Reset Timing Characteristics (VCC = 1.8 ~ 3.3 V, IOVCC = 1.65 ~ 3.3 V)

Item	Symbol	Unit	Min.	Typ.	Max.
Reset low-level width	t_{RES}	ms	1	-	-
Reset rise time	t_{rRES}	μs	-	-	10

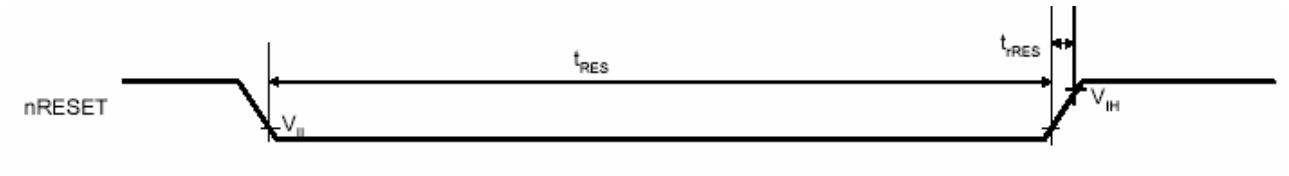

6. Operation Sequence

6.1 Power On Sequence

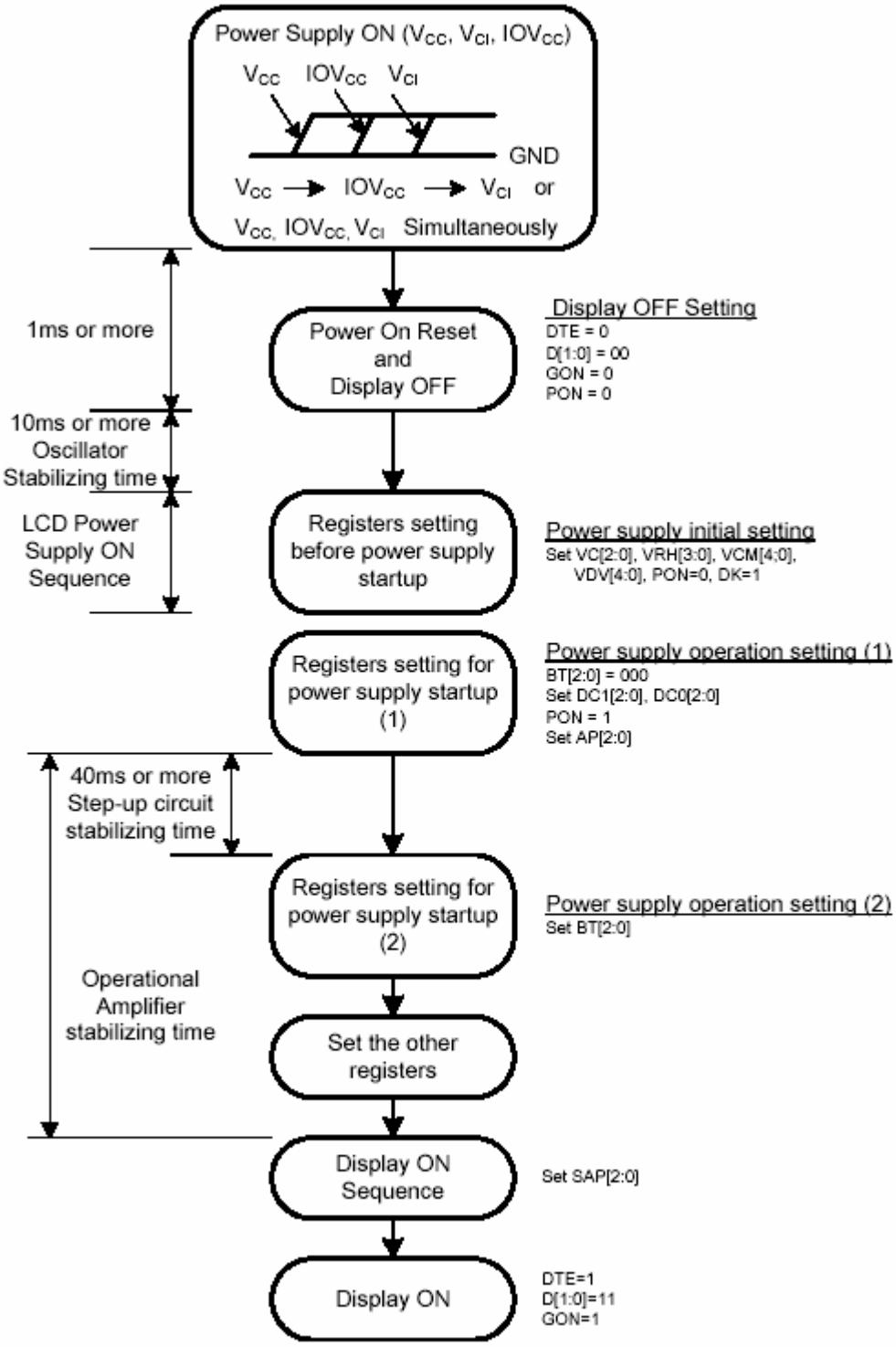

Power ON Sequence

6.2 Power Off Sequence

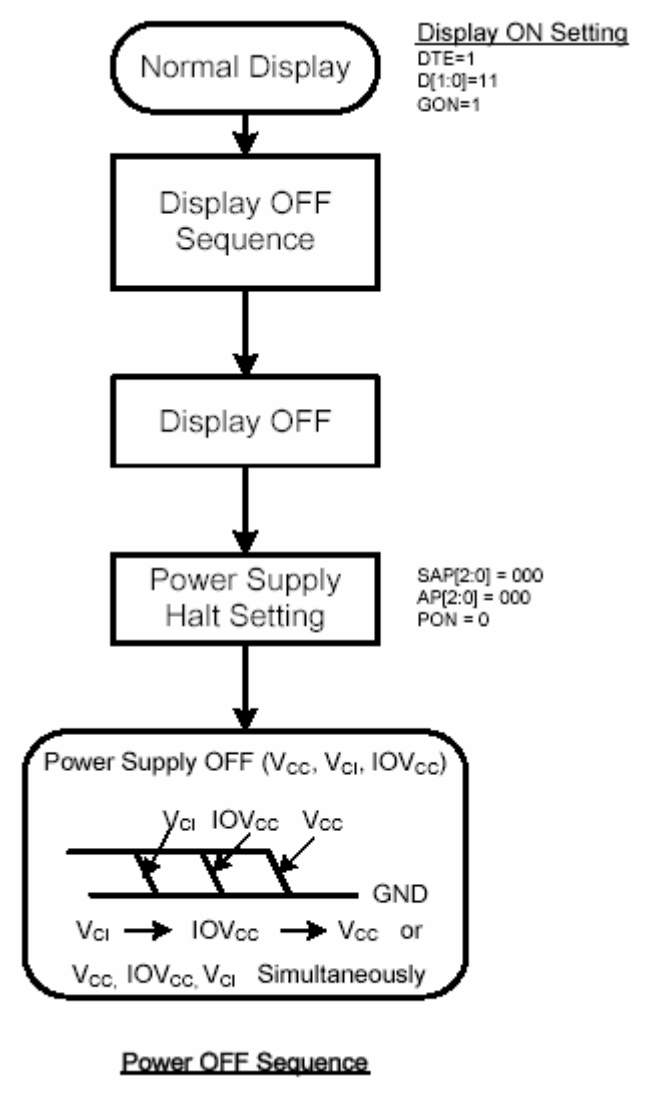

Power OFF Sequence

6.3 Display On/Off Sequence

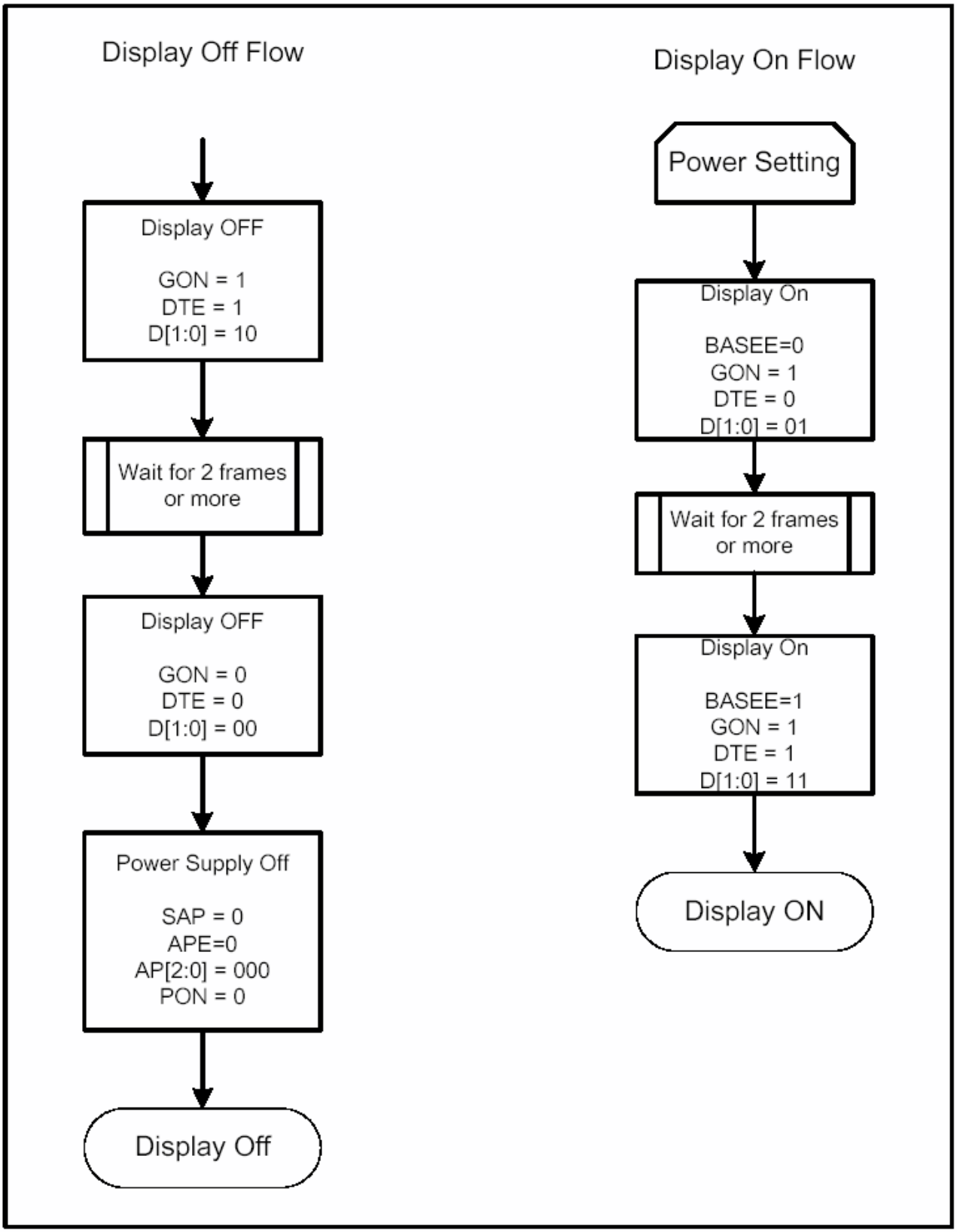

7. Reliability Test Result

7.1 Condition

Item	Condition	Sample Size	Test Result	Note
Low Temperature Operating Life test	-20℃, 96HR	3ea	pass	-
Thermal Humidity Operating Life test	40℃, 90%RH, 96HR	3ea	pass	-
Temperature Cycle ON/OFF test	-20℃ ↔ 70℃, ON/OFF, 20CYC	3ea	pass	(1)
High Temperature Storage test	80℃, 96HR	3ea	pass	-
Low Temperature Storage test	− 30℃, 96HR	3ea	pass	-
Thermal Shock Resistance	The sample should be allowed to stand the following 5 cycles of operation: TSTL for 30 minutes -> normal temperature for 5 minutes -> TSTH for 30 minutes -> normal temperature for 5 minutes, as one cycle, then taking it out and drying it at normal temperature, and allowing it stand for 24 hours	3ea	pass	
Box Drop Test	1 Corner 3 Edges 6 faces, 66㎝(MEDIUM BOX)	1box	pass	-

Note (1) ON Time over 10 seconds, OFF Time under 10 seconds

9. Cautions and Handling Precautions

9.1 Handling and Operating the Module

(1) When the module is assembled, it should be attached to the system firmly.
Do not warp or twist the module during assembly work.
(2) Protect the module from physical shock or any force. In addition to damage,
this may cause improper operation or damage to the module and back-light unit.
(3) Note that polarizers are very fragile and could be easily damaged. Do not press or scratch
the surface.
(4) Do not allow drops of water or chemicals to remain on the display surface.
If you have the droplets for a long time, staining and discoloration may occur.
(5) If the surface of the polarizer is dirty, clean it using some absorbent cotton or soft cloth.
(6) The desirable cleaners are water, IPA (Isopropyl Alcohol) or Hexane.
Do not use Ketone type materials (ex. Acetone), Ethyl alcohol, Toluene, Ethyl acid or Methyl
chloride. It might permanent damage to the polarizer due to chemical reaction.
(7) If the liquid crystal material leaks from the panel, it should be kept away from the eyes or
mouth. In case of contact with hands, legs, or clothes, it must be washed away thoroughly
with soap.
(8) Protect the module from static, it may cause damage to the CMOS ICs.
(9) Use finger-stalls with soft gloves in order to keep display clean during the incoming inspection
and assembly process.
(10) Do not disassemble the module.
(11) Protection film for polarizer on the module shall be slowly peeled off just before use so that
the electrostatic charge can be minimized.
(12) Pins of I/F connector shall not be touched directly with bare hands.
(13) Do not connect, disconnect the module in the "Power ON" condition.
(14) Power supply should always be turned on/off by the item 6.1 Power On Sequence &6.2 Power Off
Sequence

9.2 Storage and Transportation.

(1) Do not leave the panel in high temperature, and high humidity for a long time.
It is highly recommended to store the module with temperature from 0 to 35 ℃ and relative humidity of less than 70%

(2) Do not store the TFT-LCD module in direct sunlight.

(3) The module shall be stored in a dark place. When storing the modules for a long time, be sure to adopt effective measures for protecting the modules from strong ultraviolet radiation, sunlight, or fluorescent light.

(4) It is recommended that the modules should be stored under a condition where no condensation is allowed. Formation of dewdrops may cause an abnormal operation or a failure of the module. In particular, the greatest possible care should be taken to prevent any module from being operated where condensation has occurred inside.

(5) This panel has its circuitry FPC on the bottom side and should be handled carefully in order not to be stressed.

10. Outline dimension

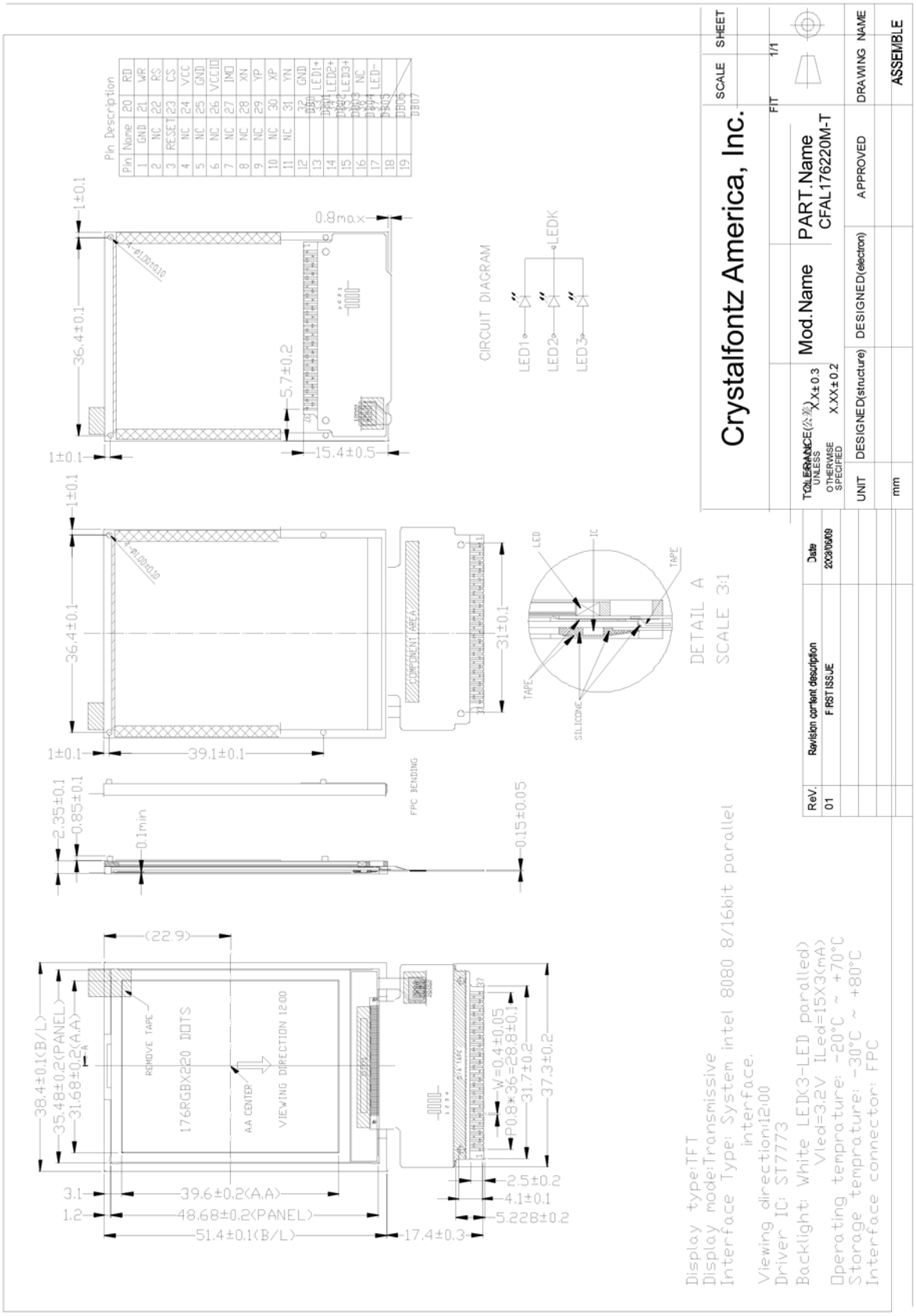

PRELIMINARY

11. LCD Module Out-Going Quality Level

(1.0) Purpose

The LCD specification provides outgoing provision and its expected quality level based on our outgoing inspection of LCD.

(2.0) Applicable Scope

The LCD specification is applicable to the arrangement in regard to outgoing Inspection and quality assurance after it.

(3.0) Quality Specification

(3.1) Quality Level

The quality level of BHL&BMDT are based on GB/T2828.1, Apply Level II, normal inspection by single sampling.

Rank	Item	AQL	Note
Major(MA)	Segment Short	0.65	
	Segment Missing		
	Solder Bridging		
	Outside Dimension		
	Cold Solder		
Minor (MI)	Black Spots, Foreign Substance, White Spots, Pinhole, Segment Deformation Air Bubbles between Glass & Polarizer, Scratchs(Glass & Polarizer), Color Variation, Solder Ball, Misalignment	1.0	

Note) AQL- Acceptable Quality Level

(3.2) Appearance Standards

1) Inspection Conditions

The LCD shall be inspected under 20W white fluorescent lamp light.
The distance between the eyes and the sample shall be 30cm.
All directions for inspecting the sample should be within 3C° to perpendicular line.

2) Definition of the Area

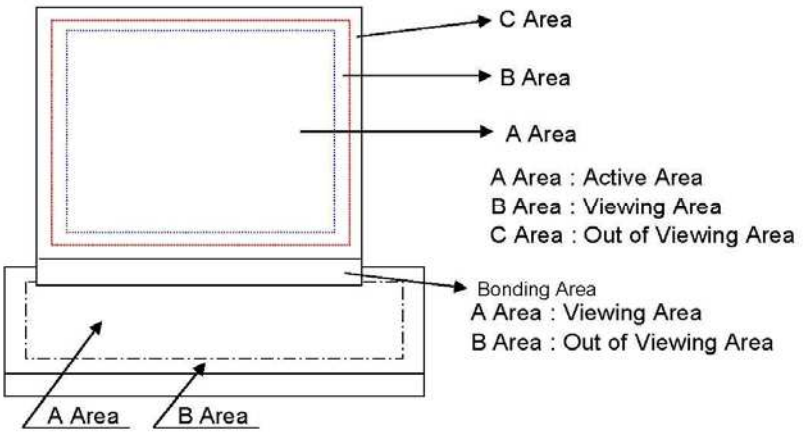

(3.3) Apperance Spec

Y

No	Item	Criteria	Rank	Remark
1	Segment Short Segment Missing	Not allowed	MA	X
2	Solder Bridging	Any bridging between components, except common circuit, is not allowed.	MA	
3	Outside Dimension	Drawing & specification must be within permitable tolerance. A Area B Area	MA	
4	Cold Solder	Cold solder is not allowed.	MA	
5	Black(White) Spots, Foreign Substances	1) Round Type Area Dimension** / Acceptable Q'ty / Remark ≤ 0.1 — Ignore ≤ 0.2 — 2 — Ignore ≤ 0.3 — 1 — Ignore 0.3 < — 0 — Ignore 2) Liner Type Dimension (Length, Width) / Acceptable Q'ty (A Area, B Area) / Remark - ≤ 0.025 — Ignore ≤ 2.5 ≤ 0.05 — 3 — Ignore ≤ 1.5 ≤0.075 — 2 — Ignore 0.075 < — Follow round type A Area B Area At (1) & (2) total defect q'ty is must not exceed 5 pieces.	MI	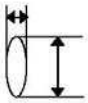 ** : Mean Diameter (X + Y)/2
6	OC Spot	Area Dimension** / Acceptable Q'ty / Remark ≤ 0.2 — Ignore ≤ 0.8 — 3 — Ignore A Area B Area ≤ 1.0 — 1 — Ignore	MI	
7	Air Bubles Between Glass & Polarizer (Polarizer Defects)	Area Dimension** / Acceptable Q'ty / Remark ≤ 0.15 — Ignore ≤ 0.3 — 3 — Ignore ≤ 0.5 — 2 — Ignore ≤ 0.7 — 1 — Ignore Total — 5 — Ignore	MI	

PRELIMINARY

(3.3) Appearance Spec

No	Item	Criteria	Rank	Remark
8	Pin hole (On Segment)	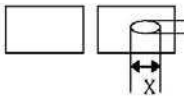 (X+Y)/2 ≤ 0.2㎜ Within 1 per one segment (Less than 0.1㎜ is not counted) Total defects q'ty is must not exceed 5 pieces.	MI	
9	Segment Deformation	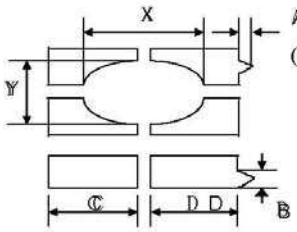 (X+Y)/2 ≤ 0.2㎜ A ≤ 0.2㎜ B ≤ 0.2㎜ (C-D) ≤ 0.2㎜ Acceptable Q'ty: Dot, Segment 1; LCD 5; ≤ 0.1 Ignore all defect Each visible dot must be more than half effective dot area	MI	(X + Y)/2 ≤ 0.2㎜
10	Color Variation	Within the three colors, except LCD Standard color is acceptable.	MI	
11	Glass & Polarizer Scratch	Follow NO.5(2) condition	MI	
12	Solder Ball	1)Acceptable if the size of void is less than 0.18㎜ 2)Acceptable if a solder ball is not movable 3)Rejectable if the solder ball exceed 5EA in 2.54 × 2.54㎜ area.	MI	
13	Miss Alignment	1)Acceptable if it dose not exceed 50% of the lead width IC. 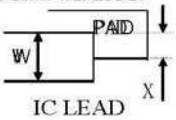 X ≤ W/2 : Accept X > W/2 : Reject IC LEAD 2)Rejectable, provided that it does exceed 50% of the component termination width. 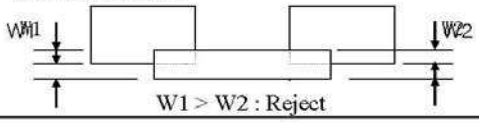 W1 > W2 : Reject		

Note : A limitation sample is given top priority

(3.3) Appearance Spec

No	Item	Criteria	Rank	Remark
14	Touch Panel	1) Round Type、Foreign Substances Area Dimension** / Acceptable Q'ty A Area / Acceptable Q'ty B Area / Remark ≤ 0.1 — Ignore ≤ 0.2 — 2 — Ignore ≤ 0.3 — 1 — Ignore 0.3 < — 0 — Ignore 2) Liner Type & Scratch Dimension Length / Dimension Width / Acceptable Q'ty A Area / Acceptable Q'ty B Area / Remark - / W≤0.025 — Ignore L≤3.0 / W≤0.05 — Ignore 3.0<L≤5.0 — 2 ≤ 7 / W≤0.1 — 1 - / W>0.1 — Follow round type Remark: Ignore 4) Newton Ring a)Regular 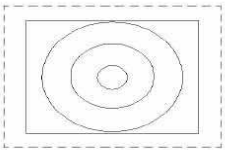 The area of the Newton ring is more than 1/3area of the touch panel It's NG. The area of the Newton ring is less than 1/3 area of the touch panel It's OK. b)None-regularity 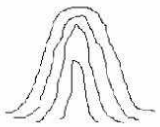 The area of the Newton ring is more than 1/2area of the touch panel It's NG. The area of the Newton ring is less than 1/2 area of the touch panel It's OK.	MI	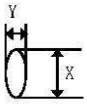 ** : Mean Diameter (X + Y)/2

12. LCD Module Operation Instruction

Part I. How to use the LCD Module

1. Don't hit the LCD Panel in any way because the LCD is made of glass.
2. Don't clean the surface of LCD with hard things. Please clean LCD with Air-gun or very soft cloth when necessary. The protective film on the POL can be removed just before assembly, otherwise, dust, spit or other foreign matter may attached on the LCD under the protective film. After the protective film is removed, only air-gun can be used to remove any dust or foreign matter. Fingure or cloth MUST NOT be used in such cases.
3. No chemical liquid is allowed to clean the LCD, such as alcohol, acetone and IPA. All of these can damage the LCD. Water on the LCD must be cleaned as soon as possible, for it will cause POL color change or other defect.
4. Please move and assemble LCD very carefully during assembly, and don't push or twist it.
5. Don't damage the FPC of LCD module. It will cause permanent defect.
6. Don't disassemble LCD module. It will cause permanent defect.
7. Don't expose LCD module under sunshine, strong fluorescence or ultraviolet radiation.
8. Please make sure that operators wear static-protective bands effectively and working tables are effectively earthing during operation.
9. Please place LCD module on the tray provided while moving it, in order to avoid mechanical damage. Hold the module's side frames to avoide damage during moving.
10. Don't twist, disassemble, squeeze or hit the PCB. It will damage the circuit or component on PCB and cause functional defect.
11. Please use the connector according to the instruction provided.
12. Please place dual module with the sub-panel upward. Trays should be placed in contrary direction. An empty tray should be placed on the top.
13. Sealing operation on PCB must be very careful to avoid short or cut the original circuit on PCB. Otherwise, it will cause permenant damage to the LCD.
14. Don't add direct DC or high voltage to LCD panel. It will cause functional damage to the LCD or shorten the life of LCD product.
15. LCD may respond slowly or display abnormally in extrem temperature (lower than -20℃ or higher than 50℃). But this doesn't mean LCD functional defect. LCD will display normally in regular temperature. Therefore, don't use LCD product in extrem temperature.
16. Don't push the display area of LCD panel, it will cause abnormal display. This doesn't mean LCD functional defect, neither. LCD will display normally in regular temperature.
17. Electrical test of LCD product is made by using mobile phone provided by Customer. We can use special test equipment to do the test, also.
18. The black band on IC on LCD product is used to protect the IC from light. Please do NOT remove it.
19. Please take great care to use connector. Customer should be responsible for connector defect caused by operation on Customer side.

Part II Storage

1. Physical status of liquid crystal will change in extrem temperature, and it can not be resumed when the temperature returns to be normal. So LCD module should be stored in required temperature.
2. LCD module should be stored in required humidity. Low hymidity may add static, while high humidity may corrode the ITO circuit of LCD product. The suitable storage environment is: temperature: 22±5℃, humidity: 55%±10%.
3. Don't expose LCD module under sunshine, strong fluorescence or ultraviolet radiation for a long time. It should be stored in dark area.
4. LCD should be stored in static-protective polythene bag. Don't expose it in the air for a long time.