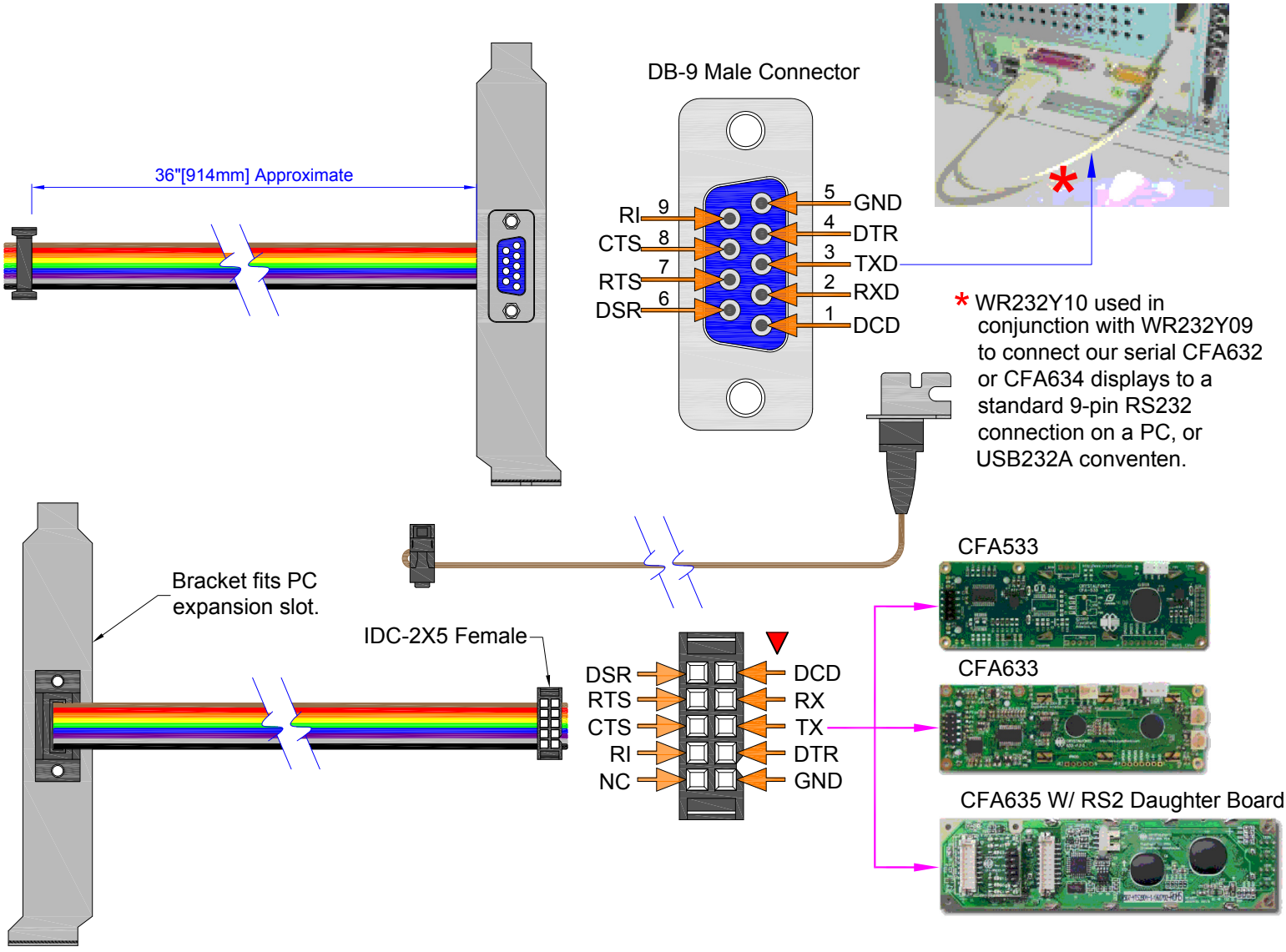

copyright © 2009 by

Crystalfontz America, Inc.

www.crystalfontz.com/products/

Part No.(s):	Scale:	Drawing Number:	Hardware Rev.:
WR232Y13	Not to scale	WR232Y13_master	vA
	Units: Inch [mm]	Date: 2009/08/27	Sheet: 1 of 1