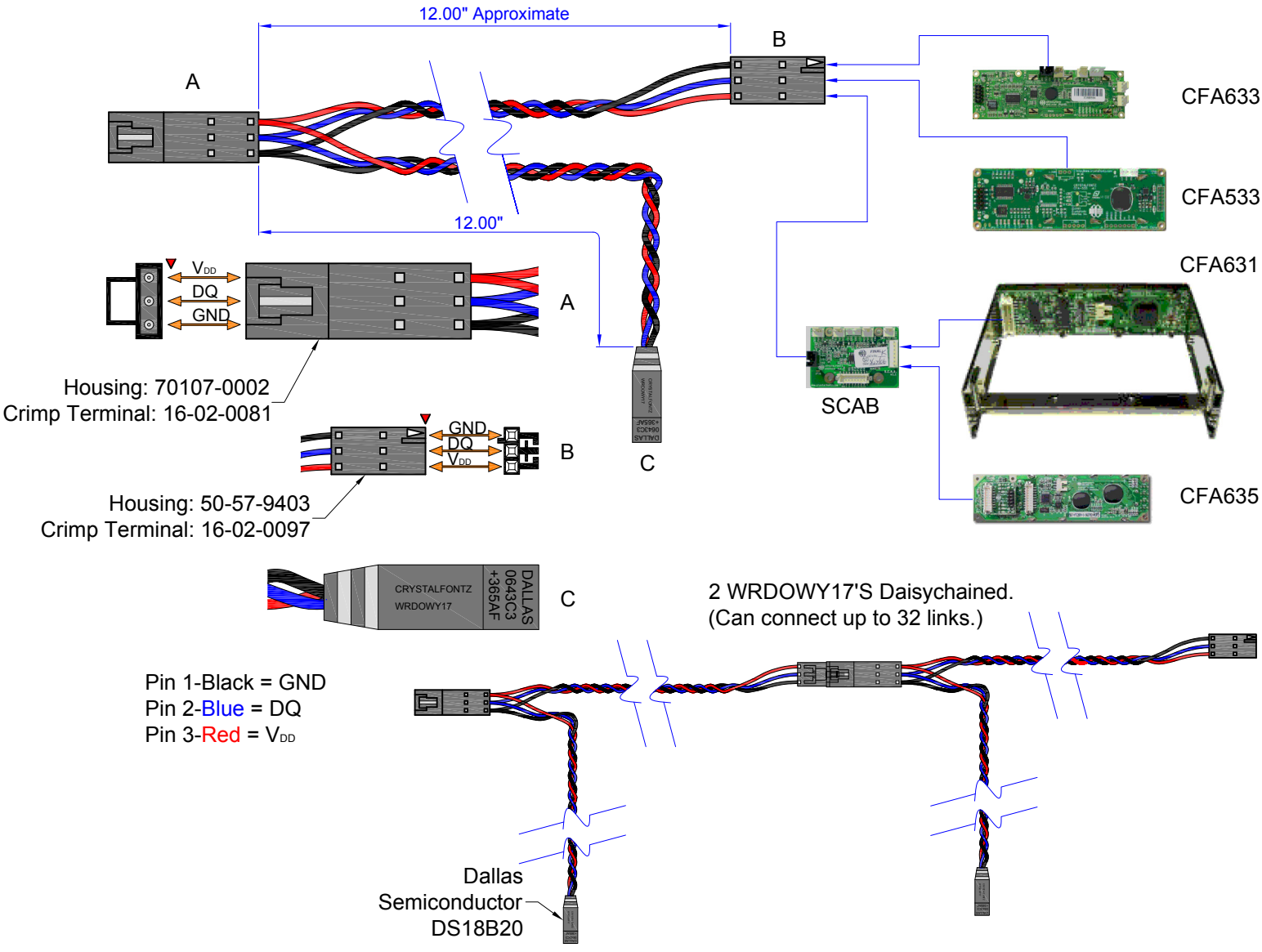

copyright © 2009 by

Crystalfontz America, Inc.

www.crystalfontz.com/products/

Part No.(s):	Scale:	Drawing Number:	Hardware Rev.:
WRDOWY17	Not to scale	WRDOWY17_master	vA
	Units: Inch	Date: 2009/08/27	Sheet: 1 of 1