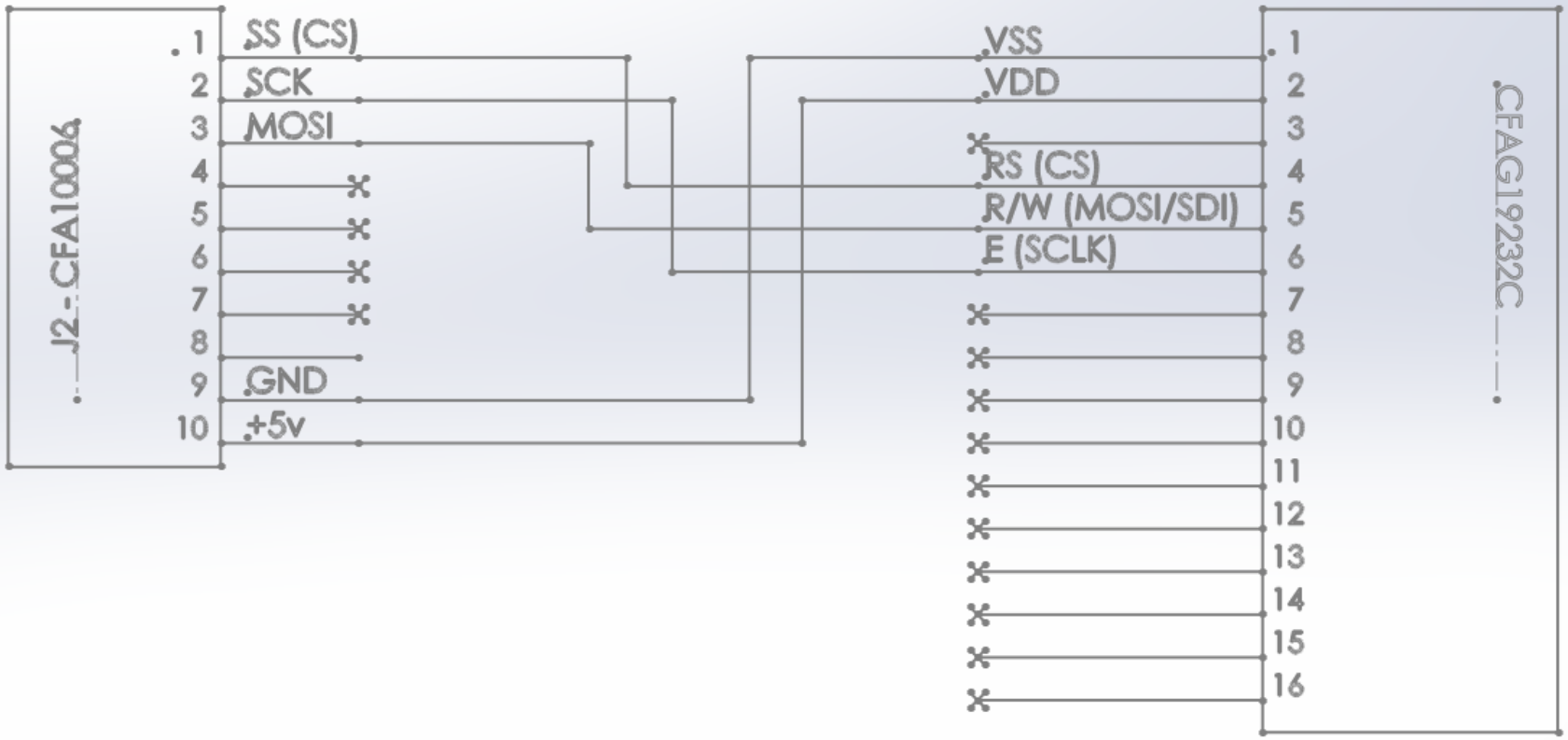
J2 - CFA10006
1
2
3
4
5
6
7
8
9
10
SS (CS)
SCK
MOSI
GND
+5v
VSS
VDD
RS (CS)
R/W (MOSI/SDI)
E (SCLK)
CFAG19232C
1
2
3
4
5
6
7
8
9
10
11
12
13
14
15
16