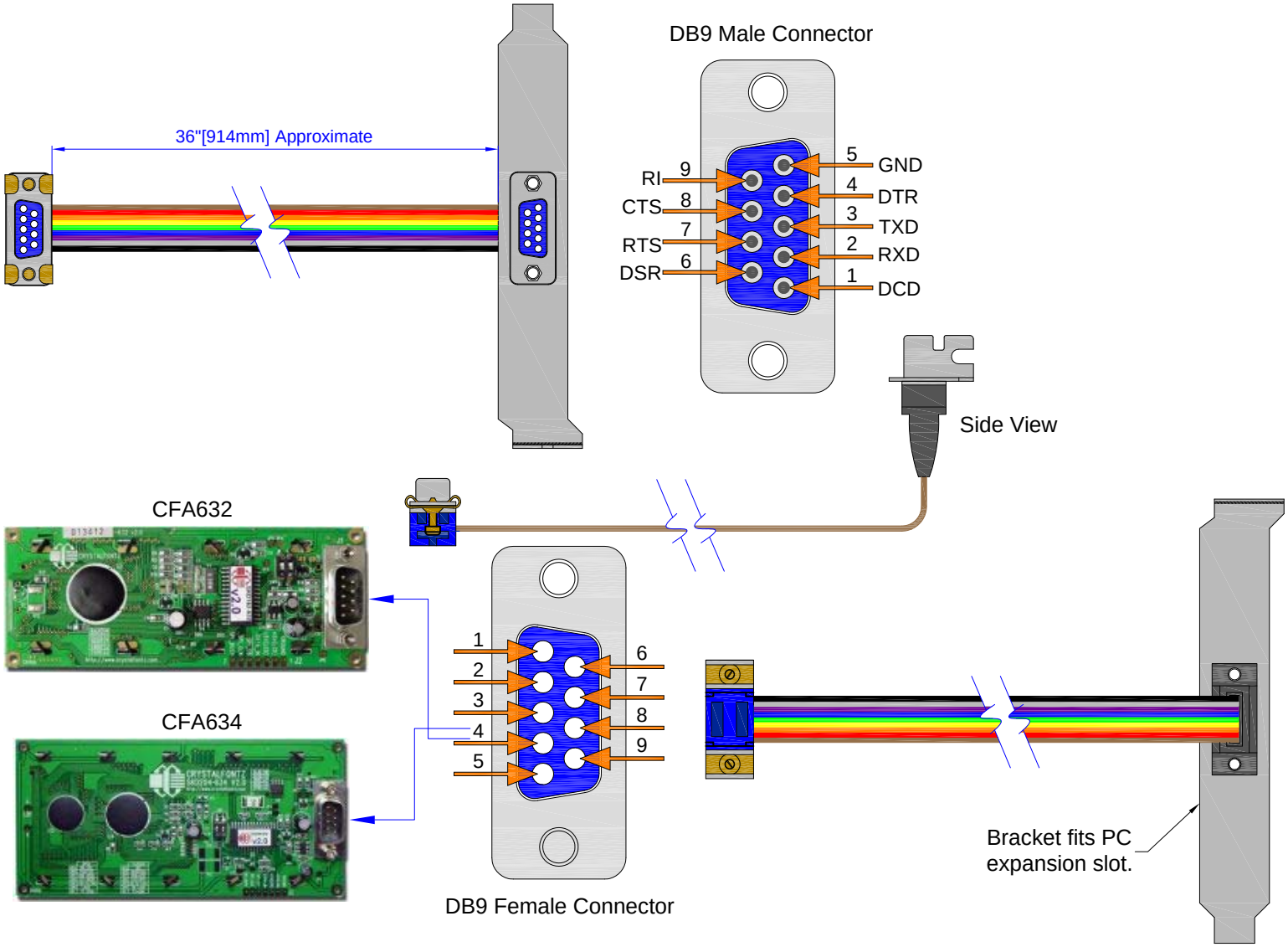

copyright © 2013 by

Crystalfontz America, Inc.

www.crystalfontz.com/products/

Part No.(s): WR-232-Y09	*Scale:* Not to scale	*Drawing Number:* WR232Y09_master	
	Units: Inch[mm]	*Date:* 2013/03/19	