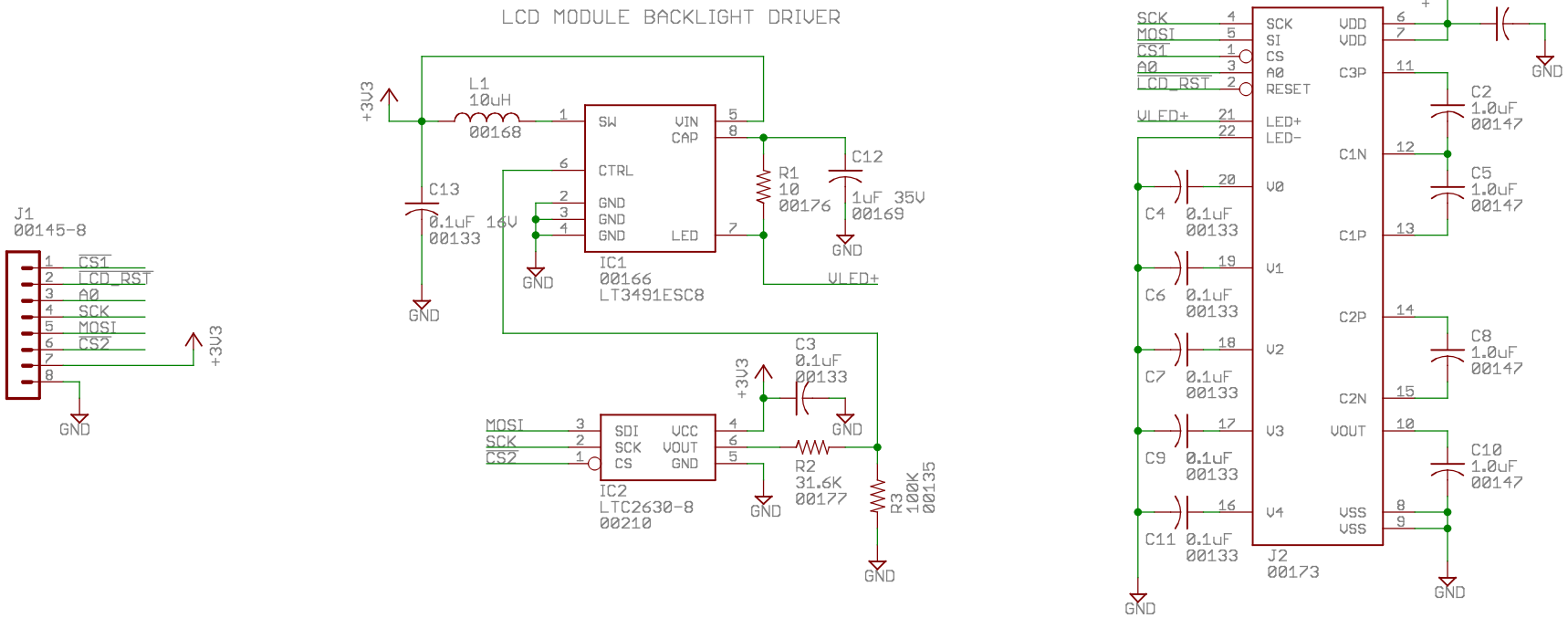

Crystalfontz America Inc.
12412 E. Saltese Ave. Spokane Valley WA 99216
(888) 206-9720 www.crystalfontz.com

TITLE: cfa_10004	BY: Tom Deutschman
Description: Carrier board for a single CFAG-4265 module with backlight control and SPI interface	REV: A
Date: 7/20/2010 3:20:29 PM	Sheet: 1/1