Crystalfontz America, Incorporated

CHARACTER LCD MODULE SPECIFICATIONS

Crystalfontz Model Number	**CFAH0802A-NYG-JP**
Hardware Version	**Revision A**
Data Sheet Version	**Revision 1.0, October 2007**
Product Pages	http://www.crystalfontz.com/products/0802a
Customer Name	
Customer Part Number	

Crystalfontz America, Incorporated

12412 East Saltese Avenue
Spokane Valley, WA 99216-0357
Phone: 888-206-9720
Fax: 509-892-1203
Email: techinfo@crystalfontz.com
URL: www.crystalfontz.com

REVISION HISTORY

HARDWARE
Current hardware version: **vA** New module.

DATA SHEET	
2007/10/15	Current Data Sheet version: **v1.0** New Data Sheet.

CONTENTS

LIST OF FIGURES

MAIN FEATURES

- 8 characters by 2 lines LCD has a large display area in a compact 58.0 (W) x 32.0 (H) x 8.9 (D) millimeter package (2.28” (W) x 1.26” (H) x 0.35” (D)).
- 4-bit or 8-bit parallel interface.
- Standard Hitachi HD44780 equivalent controller.
- Module is STN, positive, yellow-green, reflective mode LCD (displays dark characters on light background).
- Wide temperature operation: -20°C to +70°C.
- Direct sunlight readable.
- RoHS compliant.

MODULE CLASSIFICATION INFORMATION

CFA H 08 02 A - N Y G - JP*
❶ ❷ ❸ ❹ ❺ ❻ ❼ ❽ ❾

❶	Brand	Crystalfontz America, Inc.
❷	Display Type	H – Character
❸	Number of Characters (Width)	8 Characters
❹	Number of Lines (Height)	2 Lines
❺	Model Identifier	A
❻	Backlight Type & Color	N – No backlight
❼	Fluid Type, Image (Positive or Negative), & LCD Glass Color	Y – STN, positive, yellow-green
❽	Polarizer Film Type, Wide (WT) Temperature Range, & Viewing Angle (O ‘Clock)	G – Reflective, WT, 6:00[1]
❾	Special Codes	JP – English and Japanese fonts * – May have additional manufacturer’s codes at this location.

[1]*Note: For more information on Viewing Angle, see* Definition of 6 O’Clock and 12:00 O’Clock Viewing Angles (Pg. 15).

ORDERING INFORMATION

PART NUMBER	FLUID	LCD GLASS COLOR	IMAGE	POLARIZER FILM	BACKLIGHT COLOR/TYPE
CFAH0802A-NYG-JP	STN	yellow-green	positive	reflective	no backlight 
Additional variants (same form factor, different LCD mode or backlight):					
CFAH0802A-GGH-JP	STN	gray	positive	transflective	green LED 
CFAH0802A-GYH-JP	STN	yellow-green	positive	transflective	green LED 
CFAH0802A-TMI-JP	STN	blue	negative	transmissive	white LED 
CFAH0802A-TTI-JP	FSTN		negative	transmissive	white LED 
CFAH0802A-YMI-JP	STN	blue	negative	transmissive	yellow-green LED 
CFAH0802A-YYH-JP	STN	yellow-green	positive	transflective	yellow-green LED 

MECHANICAL SPECIFICATIONS

PHYSICAL CHARACTERISTICS

ITEM	SIZE
Number of Characters and Lines	8 Characters x 2 Lines
Module Dimensions	58.0 (W) x 32.0 (H) x 8.9 (D) mm
Viewing Area	38.0 (W) x 16.0 (H) mm
Active Area	27.81 (W) x 11.5 (H) mm
Character Size	2.96 (W) x 5.56 (H) mm
Character Pitch	3.55 (W) x 5.94 (H) mm
Dot Size	0.56 (W) x 0.66 (H) mm
Dot Pitch	0.60 (W) x 0.70 (H) mm
Weight	16 grams (typical)

MODULE OUTLINE DRAWING

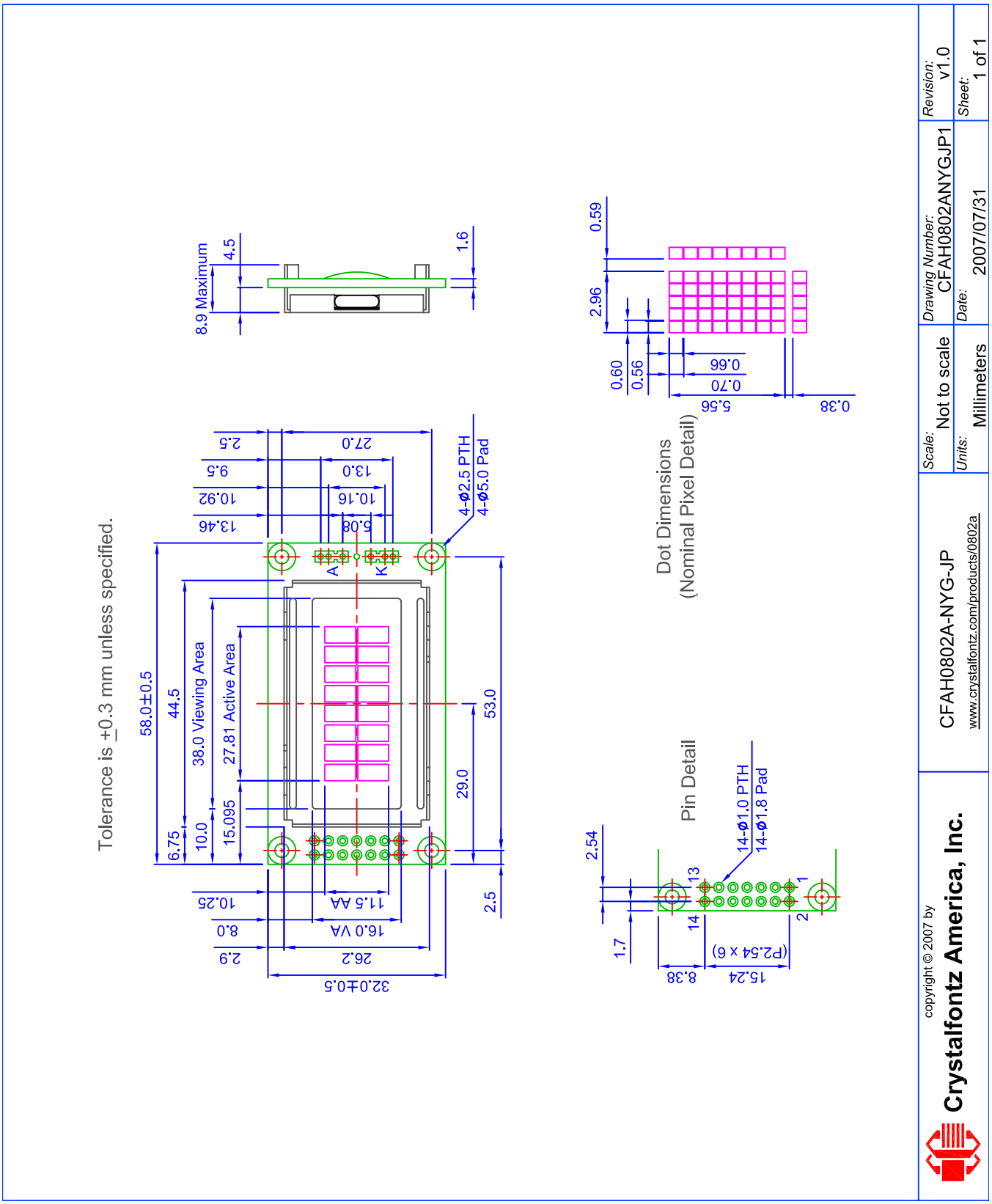

Figure 1. Module Outline Drawing

ELECTRICAL SPECIFICATIONS

SYSTEM BLOCK DIAGRAM

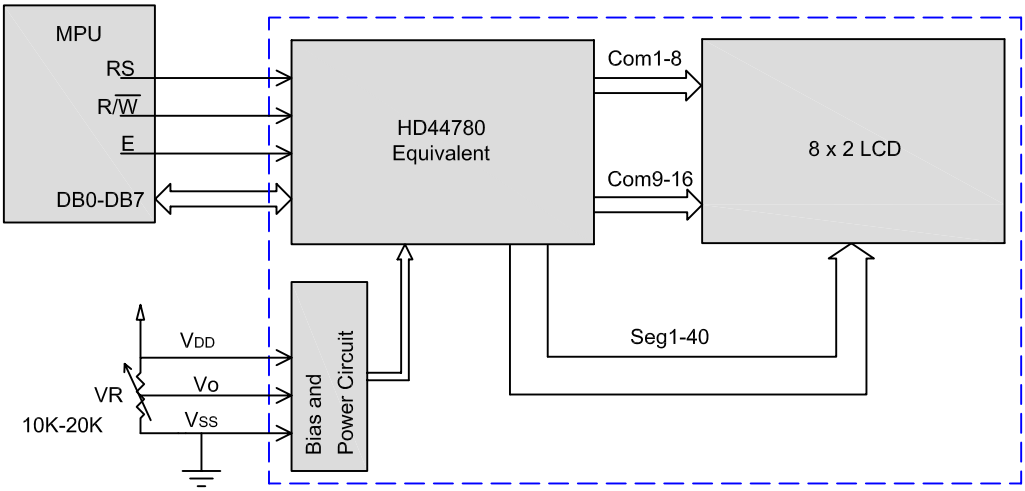

DDRAM ADDRESS

		Column							
		1	2	3	4	5	6	7	8
Row	1	00	01	02	03	04	05	06	07
	2	40	41	42	43	44	45	46	47

Figure 2. System Block Diagram

DRIVING METHOD

DRIVING METHOD	SPECIFICATION
Duty	1/16
Bias	1/5

ABSOLUTE MAXIMUM RATINGS

ABSOLUTE MAXIMUM RATINGS	SYMBOL	MINIMUM	MAXIMUM
Operating Temperature*	T_{OP}	-20°C	+70°C
Storage Temperature*	T_{ST}	-30°C	+80°C
Input Voltage	V_I	V_{SS}	V_{DD}
Supply Voltage for Logic	V_{DD} - V_{SS}	-0.3v	+7v
Supply Voltage for LCD	V_{DD} - V_O	-0.3v	+13v
**Note: Prolonged exposure at temperatures outside of this range may cause permanent damage to the module.*			

DC CHARACTERISTICS

DC CHARACTERISTICS		SYMBOL	MINIMUM	TYPICAL	MAXIMUM	TEST CONDITION
Supply Voltage for Logic		V_{DD} - V_{SS}	+4.75v		+5.25v	
Supply Voltage for Driving LCD	T_A = 0ºC	V_{DD} - V_O			+4.5v	
	T_A = +25ºC			+4.2v		
	T_A = +50ºC		+3.9v			
Input High Voltage		V_{IH}	+2.2v		V_{DD}	Pins: E, RS, R/$\overline{W}$, DB0 - DB7
Input Low Voltage		V_{IL}			+0.6v	
Output High Voltage		V_{OH}	+2.4v			I_{OH} = - 0.1 mA Pins: DB0 - DB7
Output Low Voltage		V_{OL}			+0.4v	I_{OL} = 0.1 mA Pins: DB0 - DB7
Supply Current	V_{DD} = 5V	I_{DD}			0.4 mA	

INTERFACE PIN FUNCTIONS

PIN	SIGNAL	LEVEL	DIRECTION	DESCRIPTION
1	V_{SS}	0v		Ground
2	V_{DD}	+5.0v		Supply voltage for logic
3	V_O	variable		Supply voltage for driving LCD V_O = +1v typical at V_{DD} = +5v which gives a V_{LCD} = (V_{DD} - V_O) = +4v
4	RS	H/L	I	Register selection input H: Data register (for read and write) L: Instruction code (for write)
5	R/$\overline{W}$	H/L	I	H: Read (MPU→Module) L: Write (MPU←Module)

PIN	SIGNAL	LEVEL	DIRECTION	DESCRIPTION
6	E	H,H→L	I	Read/write enable signal H: Read data is enabled by a high level. H→L: Write data is latched on the falling edge.
7	DB0	H/L	I/O	Data bit 0
8	DB1	H/L	I/O	Data bit 1
9	DB2	H/L	I/O	Data bit 2
10	DB3	H/L	I/O	Data bit 3
11	DB4	H/L	I/O	Data bit 4
12	DB5	H/L	I/O	Data bit 5
13	DB6	H/L	I/O	Data bit 6
14	DB7	H/L	I/O	Data bit 7

TYPICAL V_O CONNECTIONS FOR DISPLAY CONTRAST

Adjust V_O to +1v (V_{LCD} = +4v) as an initial setting. When the module is operational, readjust V_O for optimal display appearance.

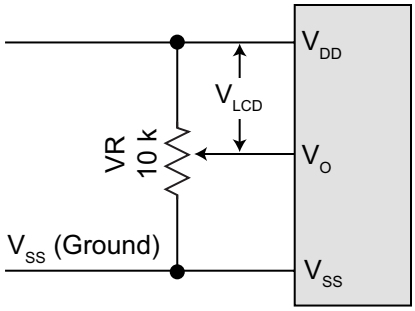

Figure 3. Typical V_O Connections

We recommend allowing field adjustment of V_O for all designs. The optimal value for V_O will change with temperature, variations in V_{DD}, and viewing angle. V_O will also vary module-to-module and batch-to-batch due to normal manufacturing variations.

Ideally, adjustments to V_O should be available to the end user so each user can adjust the display to the optimal contrast for their required viewing conditions. At a minimum, your design should allow V_O to be adjusted as part of your product's final test.

Although a potentiometer is shown as a typical connection, V_O can be driven by your microcontroller, either by using a DAC or a filtered PWM. Displays that require V_O to be negative may need a level-shifting circuit. Please do not hesitate to contact Crystalfontz application support for design assistance on your application.

ESD (ELECTRO-STATIC DISCHARGE) SPECIFICATIONS

This circuitry is industry standard CMOS logic and is susceptible to ESD damage. Please use industry standard antistatic precautions as you would for any other PCB such as expansion cards or motherboards. For more information, see CARE AND HANDLING PRECAUTIONS (Pg. 18).

OPTICAL SPECIFICATIONS

OPTICAL CHARACTERISTICS

ITEM	SYMBOL	CONDITION	MINIMUM	TYPICAL	MAXIMUM
Viewing Angle (6 o'clock) (Vertical, Horizontal)	(V)θ	CR≥2	10°		40°
	(H)φ	CR≥2	-40°		40°
Contrast Ratio	CR			3	
LCD Response Time*	T rise	Ta = 25°C		150 ms	200 ms
	T fall	Ta = 25°C		150 ms	200 ms
**Response Time: The amount of time it takes a liquid crystal cell to go from active to inactive or back again.*					

OPTICAL DEFINITIONS

- Operating Voltage (V_{LCD}): V_{OP}
- Viewing Angle
  - Vertical (V)θ: 0°
  - Horizontal (H)φ: 0°
- Frame Frequency: 64 Hz
- Driving Waveform: 1/16 Duty, 1/5 Bias
- Ambient Temperature (Ta): 25°C

Definition of Operation Voltage (V_{op})

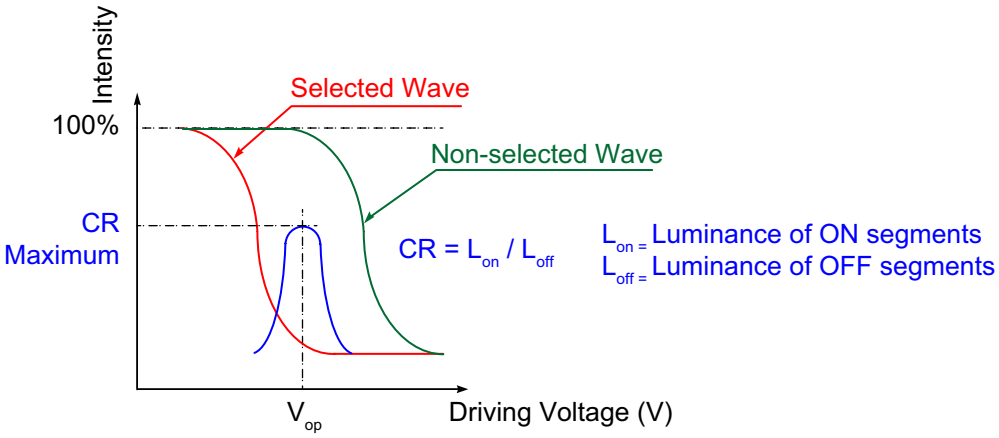

Figure 4. Definition of Operation Voltage (V_{OP}) (Positive)

Definition of Response Time (Tr, Tf)

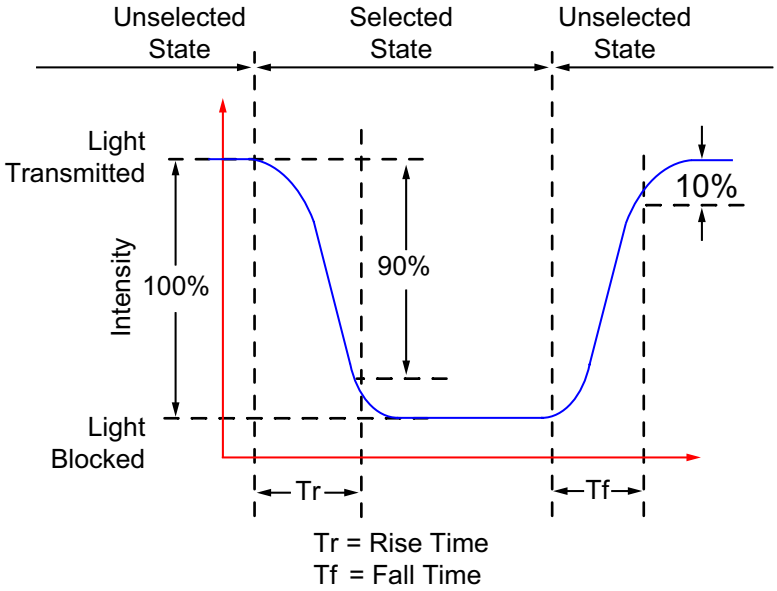

Figure 5. Definition of Response Time (Tr, Tf) (Positive)

Definition of Vertical and Horizontal Viewing Angles (CR>2)

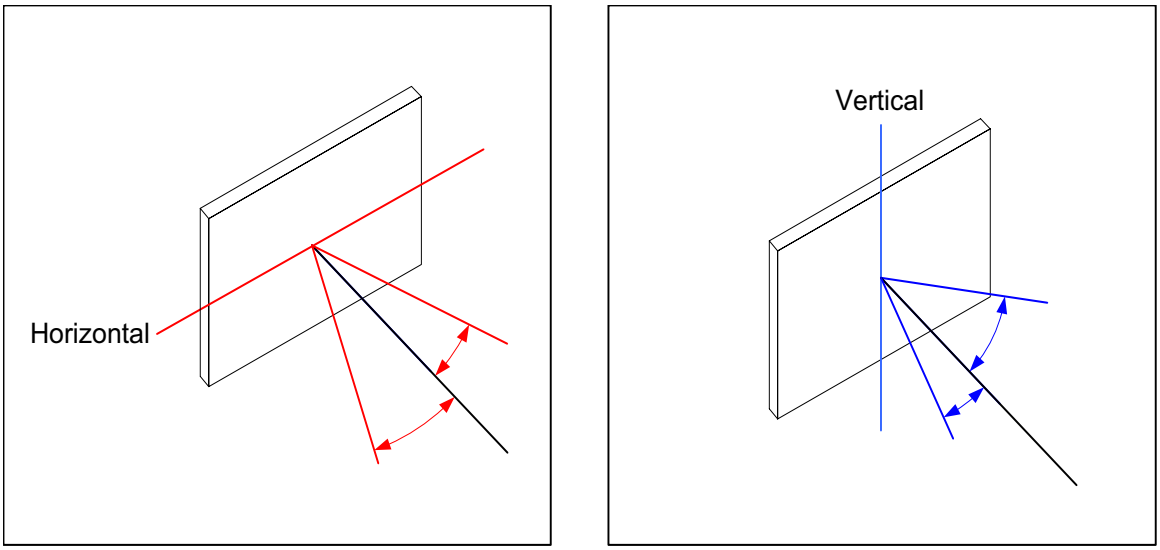

Figure 6. Definition of Horizontal and Vertical Viewing Angles (CR>2)

Definition of 6 O'Clock and 12:00 O'Clock Viewing Angles

This module has a 6:00 o'clock viewing angle. A 6:00 o'clock viewing angle is a bottom viewing angle like what you would see when you look at a cell phone or calculator. A 12:00 o'clock viewing angle is a top viewing angle like what you would see when you look at the gauges in a golf cart or airplane.

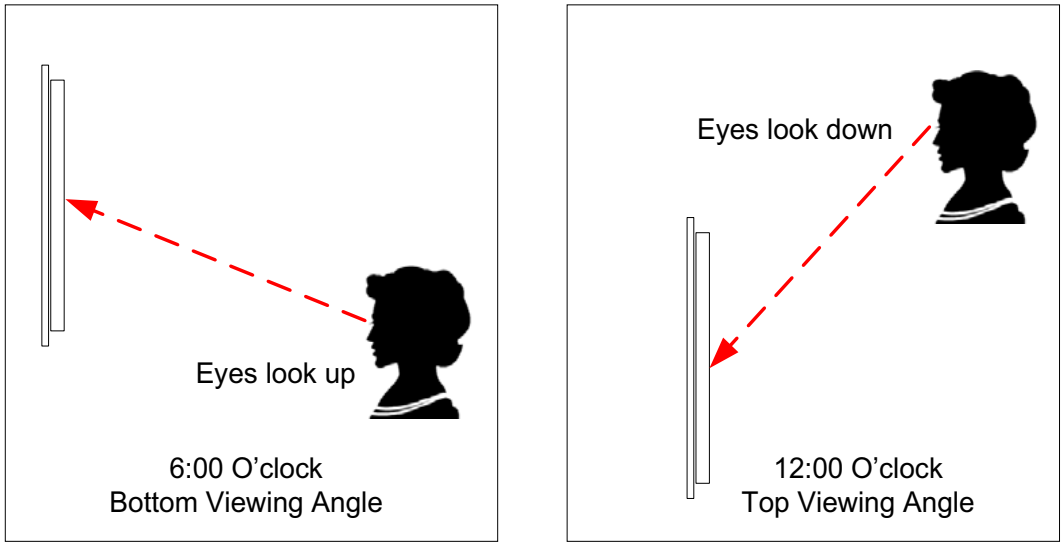

Figure 7. Definition of 6:00 O'Clock and 12:00 O'Clock Viewing Angles

LCD CONTROLLER INTERFACE

The CFAH0802A-NYG-JP uses a Sunplus SPLC780C controller. The SPLC780C is compatible with the industry standard Hitachi HD44780 controller. Software written for modules that use the HD44780 should work without modification.

For your reference, we added APPENDIX B: SUNPLUS SPLC780C CONTROLLER DATA SHEET (Pg. 24) to this CFAH0802A-NYG-JP Data Sheet.

DISPLAY POSITION DDRAM ADDRESS

The following table shows the relationship between the controller's addresses and the corresponding character location on the CFAH0802A-NYG-JP.

ROW	COLUMN							
	1	2	3	4	5	6	7	8
0	0x00	0x01	0x02	0x03	0x04	0x05	0x06	0x07
1	0x40	0x41	0x42	0x43	0x44	0x45	0x46	0x47

CHARACTER GENERATOR ROM (CGROM)

To find the code for a given character, add the two numbers that are shown in bold for its row and column. For example, the lowercase “h” is in the column labeled “96_{10}” and in the row labeled “8_{10}”. So you would add 96 + 8 to get 104. When you send a byte with the value of 104 to the display, then a lowercase “h” will be shown. (See APPENDIX B: SUNPLUS SPLC780C CONTROLLER DATA SHEET (Pg. 24).

Figure 8. Character Generator ROM (CGROM)

PRODUCT RELIABILITY

ITEM	SPECIFICATION
LCD	50,000 to 100,000 hours (typical)

PRODUCT LONGEVITY

Crystalfontz is committed to making all of our LCD modules available for as long as possible. Occasionally, a supplier discontinues a component, or a process used to make the module becomes obsolete, or the process moves to a more modern manufacturing line. In order to continue making the module, we will do our best to find an acceptable replacement part or process which will make the “replacement” fit, form, and function compatible with its predecessor.

Our goal is that the modified design will not change fit, form, or function for your application. In most situations, you should not notice a difference when comparing an older module to a newer module that uses a modified replacement part or process. Sometimes, the change results in a slight variation, perhaps an improvement, over the previous design.

Although the module is still within the stated Data Sheet specifications and tolerances, the change may require a modification to your circuit and/or firmware. Possible changes include:

- LCD fluid, polarizers, or the LCD manufacturing process. These items may change the appearance of the display, requiring an adjustment to V_O (See Typical V_O Connections for Display Contrast (Pg. 11).)
- Backlight LEDs. Brightness may be affected (perhaps the new LEDs have better efficiency) or the current they draw may change (new LEDs may have a different V_F).
- Controller. A new controller may require you to make minor changes in your code.
- Component Tolerances. Module components have manufacturing tolerances. In extreme cases, the tolerance stack can change the visual or operating characteristics.

Please understand that we avoid change whenever possible; we only change a part or process if we have no other option to keep the module available. If we cannot find a way to keep a module in production, we will be forced to discontinue the module (“End of Life,” EOL) and offer a substitute of a similar existing or new module. If you must be notified that a change / EOL is to occur, please contact Crystalfontz Technical Support. Technical Support will generate a semi-custom part number that ensures you will be notified if any changes have occurred since your last order.

CARE AND HANDLING PRECAUTIONS

For optimum operation of the CFAH0802A-NYG-JP and to prolong its life, please follow the precautions described below.

ESD (ELECTRO-STATIC DISCHARGE)

The circuitry is industry standard CMOS logic and susceptible to ESD damage. Please use industry standard antistatic precautions as you would for any other PCB such as expansion cards or motherboards. Ground your body, work surfaces, and equipment.

DESIGN AND MOUNTING

- The exposed surface of the LCD “glass” is actually a polarizer laminated on top of the glass.To protect the soft plastic polarizer from damage, the CFAH0802A-NYG-JP ships with a protective film over the polarizer. Please peel off the protective film slowly. Peeling off the protective film abruptly may generate static electricity.
- The polarizer is made out of soft plastic and is easily scratched or damaged. When handling the module, avoid touching the polarizer. Finger oils are difficult to remove.
- To protect the soft plastic polarizer from damage, place a transparent plate (for example, acrylic, polycarbonate, or glass) in front of the module, leaving a small gap between the plate and the display surface. We use GE HP-92 Lexan, which is readily available and works well.
- Do not disassemble or modify the module.
- Do not modify the tab of the metal holder or make connections to it.
- Solder only to the I/O terminals. Use care when removing solder—it is possible to damage the PCB.
- Do not reverse polarity to the power supply connections. Reversing polarity will immediately ruin the module.

AVOID SHOCK, IMPACT, TORQUE, AND TENSION

- Do not expose the CFAH0802A-NYG-JP to strong mechanical shock, impact, torque, and tension.
- Do not drop, toss, bend, or twist the module.
- Do not place weight or pressure on the module.

IF LCD PANEL BREAKS

- If the LCD panel breaks, be careful not to get the liquid crystal fluid in your mouth or eyes.
- If the liquid crystal fluid touches your skin, clothes, or work surface, wash it off immediately using soap and plenty of water.
- Do not eat the LCD panel.

CLEANING

The polarizer (laminated to the glass) is soft plastic. The soft plastic is easily scratched or damaged. Be very careful when you clean the polarizer.

- Do not clean the polarizer with liquids. Do not wipe the polarizer with any type of cloth or swab (for example, Q-tips).
- Use the removable protective film to remove smudges (for example, fingerprints) and any foreign matter. If you no longer have the protective film, use standard transparent office tape (for example, Scotch® brand “Crystal Clear Tape”). If the polarizer is dusty, you may carefully blow it off with clean, dry, oil-free compressed air.

OPERATION

- We do not recommend connecting this module to a PC's parallel port as an "end product.” This module is not "user friendly" and connecting them to a PC's parallel port is often difficult, frustrating, and can result in a "dead" display due to mishandling. For more information, see our forum thread at http://www.crystalfontz.com/forum/showthread.php?s=&threadid=3257.
- Your circuit should be designed to protect the CFAH0802A-NYG-JP from ESD and power supply transients.
- Observe the operating temperature limitations: from -20°C minimum to +70°C maximum with minimal fluctuations. Operation outside of these limits may shorten the life and/or harm the display.
  - At lower temperatures of this range, response time is delayed.
  - At higher temperatures of this range, display becomes dark. (You may need to adjust the contrast.)

- Operate away from dust, moisture, and direct sunlight.

STORAGE AND RECYCLING

- Store in an ESD-approved container away from dust, moisture, and direct sunlight.
- Observe the storage temperature limitations: from -30°C minimum to +80°C maximum with minimal fluctuations. Rapid temperature changes can cause moisture to form, resulting in permanent damage.
- Do not allow weight to be placed on the CFAH0802A-NYG-JPs while they are in storage.
- Please recycle your outdated Crystalfontz LCD modules at an approved facility.

APPENDIX A: QUALITY ASSURANCE STANDARDS

INSPECTION CONDITIONS

- Environment
  - Temperature: 25±5°C
  - Humidity: 30~85% RH (Noncondensing)
- For visual inspection of active display area
  - Source lighting: two 20-Watt or one 40-Watt fluorescent light
  - Display adjusted for best contrast
  - Viewing distance: 30±5 cm (about 12 inches)
  - Viewing angle: inspect at 45° angle of vertical line right and left, top and bottom

COLOR DEFINITIONS

We try to describe the appearance of our LCD modules as accurately as possible. For the photos, we adjust the backlight (if any) and contrast for optimal appearance. Actual display appearance may vary due to (1) different operating conditions, (2) inaccuracies of our camera, (3) color interpretation of the photos on your monitor, and/or (4) personal differences in the perception of color.

DEFINITION OF ACTIVE AREA AND VIEWING AREA

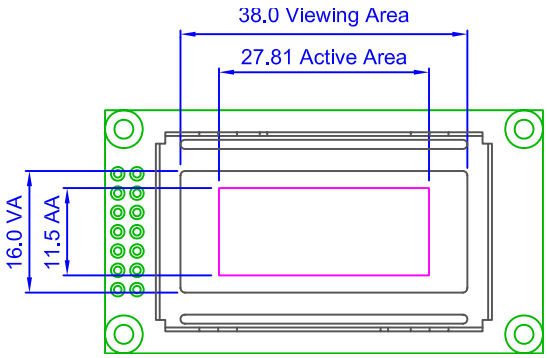

ACCEPTANCE SAMPLING

DEFECT TYPE	AQL*
Major	≤.65%
Minor	<1.0%
* Acceptable Quality Level: maximum allowable error rate or variation from standard	

DEFECTS CLASSIFICATION

Defects are defined as:

- Major Defect: results in failure or substantially reduces usability of unit for its intended purpose
- Minor Defect: deviates from standards but is not likely to reduce usability for its intended purpose

ACCEPTANCE STANDARDS

#	DEFECT TYPE	CRITERIA			MAJOR / MINOR
1	Electrical defects	1. No display, display malfunctions, or shorted segments. 2. Current consumption exceeds specifications.			Major
2	Viewing area defect	Viewing area does not meet specifications.			Major
3	Contrast adjustment defect	Contrast adjustment fails or malfunctions.			Major
4	Blemishes or foreign matter on display segments	Blemish 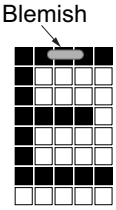	*Defect Size*	*Acceptable Qty*	Minor
			≤0.30 mm	3	
			≤2 defects within 10 mm of each other		
5	Blemishes or foreign matter outside of display segments	Defect Size = (Width + Length)/2 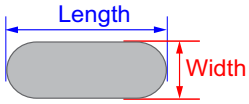	*Defect Size*	*Acceptable Qty*	Minor
			≤0.15 mm	Ignore	
			0.15 to 0.20 mm	3	
			0.20 to 0.25 mm	2	
			> 0.30 mm	1	
6	Dark lines or scratches in display area 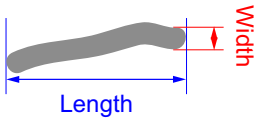	*Defect Width*	*Defect Length*	*Acceptable Qty*	Minor
		≤0.03 mm	≤3.0 mm	3	
		0.03 to 0.05	≤2.0 mm	2	
		0.05 to 0.08	≤2.0 mm	1	
		0.08 to 0.10	≤3.0 mm	0	
		≥0.10	>3.0 mm	0	

#	DEFECT TYPE	CRITERIA		MAJOR / MINOR
7	Bubbles between polarizer film and glass	*Defect Size*	*Acceptable Qty*	Minor
		≤0.20 mm	Ignore	
		0.20 to 0.40 mm	3	
		0.40 to 0.60 mm	2	
		≥0.60 mm	0	
8	Display pattern defect	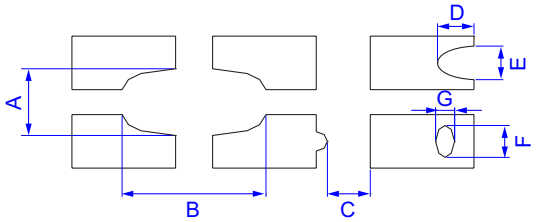		Minor
		Dot Size	*Acceptable Qty*	
		((A+B)/2)≤0.20 mm	≤3 total defects ≤2 pinholes per digit	
		C>0 mm		
		((D+E)/2)≤0.25 mm		
		((F+G)/2)≤0.25 mm		
9	Backlight defects	1. Light fails or flickers. (Major) 2. Color and luminance do not correspond to specifications. (Major) 3. Exceeds standards for display's blemishes, foreign matter, dark lines or scratches. (Minor)		See list ←
10	PCB defects	1. Oxidation or contamination on connectors.* 2. Wrong parts, missing parts, or parts not in specification.* 3. Jumpers set incorrectly. (Minor) 4. Solder (if any) on bezel, LED pad, zebra pad, or screw hole pad is not smooth. (Minor) *Minor if display functions correctly. Major if the display fails.		See list ←
11	Soldering defects	1. Unmelted solder paste. 2. Cold solder joints, missing solder connections, or oxidation.* 3. Solder bridges causing short circuits.* 4. Residue or solder balls. 5. Solder flux is black or brown. *Minor if display functions correctly. Major if the display fails.		Minor

APPENDIX B: SUNPLUS SPLC780C CONTROLLER DATA SHEET

The complete *Sunplus SPLC780C 16COM/40SEG Controller/Driver Data Sheet* (47 pages) follows.

DATASHEET

Appendix

凌陽科技
SUNPLUS

SPLC780C

16COM/40SEG Controller/Driver

JUL. 09, 2002

Version 1.1

Table of Contents

PAGE

16COM/40SEG CONTROLLER/DRIVER

1. GENERAL DESCRIPTION

The SPLC780C, a dot-matrix LCD controller and driver from SUNPLUS, is a unique design for displaying alpha-numeric, Japanese-Kana characters and symbols. The SPLC780C provides two types of interfaces to MPU: 4-bit and 8-bit interfaces. The transferring speed of 8-bit is twice faster than 4-bit. A single SPLC780C is able to display up to two 8-character lines. By cascading with SPLC100 or SPLC063, the display capability can be extended. The CMOS technology ensures the power saves in the most efficient way and the performance keeps in the highest rank.

2. FEATURES

- Character generator ROM: 10880 bits
  - Character font 5 x 8 dots: 192 characters
  - Character font 5 x 10 dots: 64 characters
- Character generator RAM: 512 bits
  - Character font 5 x 8 dots: 8 characters
  - Character font 5 x 10 dots: 4 characters
- 4-bit or 8-bit MPU interfaces
- Direct driver for LCD: 16 COMs x 40 SEGs
- Duty factor (selected by program):
  - 1/8 duty: 1 line of 5 x 8 dots
  - 1/11 duty: 1 line of 5 x 10 dots
  - 1/16 duty: 2 lines of 5 x 8 dots / line
- Built-in power on automatic reset circuit
- Built-in oscillator circuit (with external resistor)
- Support external clock operation
- Low Power Consumption
- Package form: 80 QFP or bare chip available

3. BLOCK DIAGRAM

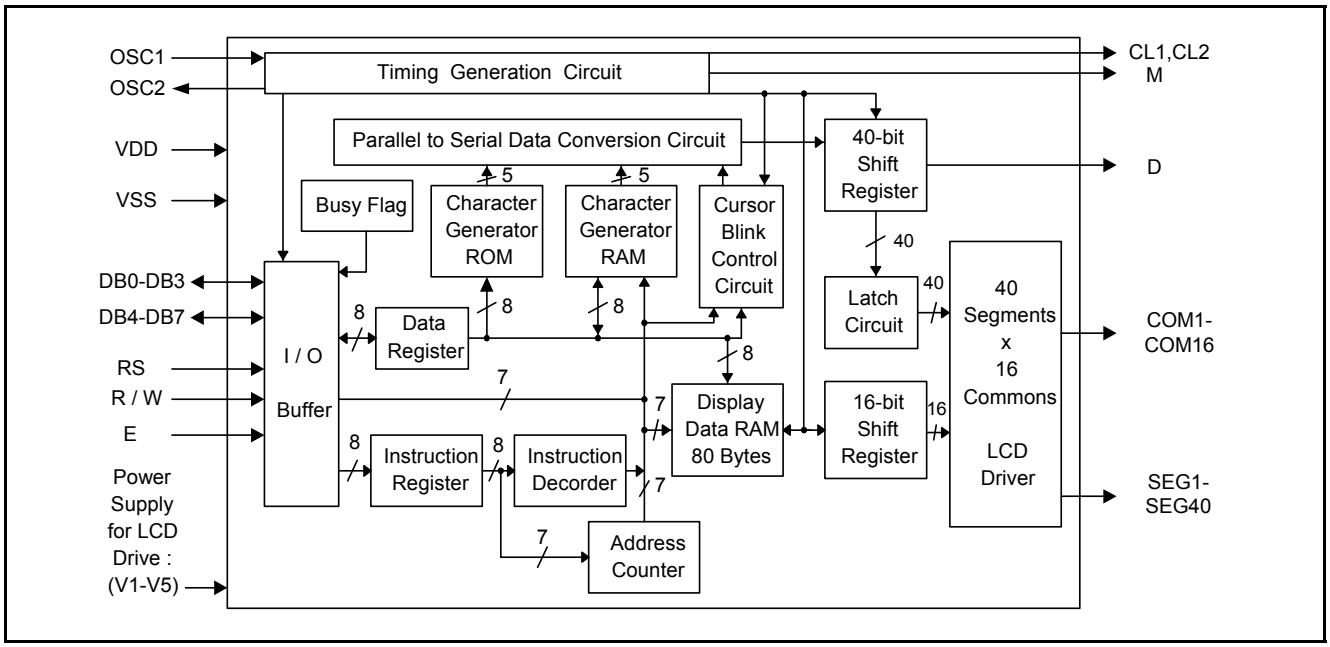

4. SIGNAL DESCRIPTIONS

Mnemonic	PIN No.	Type	Description
VDD	33	I	Power input
VSS	23	I	Ground
OSC1 OSC2	24 25	-	Both OSC1 and OSC2 are connected to resistor for internal oscillator circuit. For external clock operation, the clock is input to OSC1.
V1 - V5	26 - 30	I	Supply voltage for LCD driving.
E	38	I	A start signal for reading or writing data.
RW	37	I	A signal for selecting read or write actions. 1: Read, 0: Write.
RS	36	I	A signal for selecting registers. 1: Data Register (for read and write) 0: Instruction Register (for write), Busy flag - Address Counter (for read).
DB0 - DB3	39 - 42	I/O	Low 4-bit data
DB4 - DB7	43 - 46	I/O	High 4-bit data
CL1	31	O	Clock to latch serial data D.
CL2	32	O	Clock to shift serial data D.
M	34	O	Switch signal to convert LCD waveform to AC.
D	35	O	Sends character pattern data corresponding to each common signal serially. 1: Selection, 0: Non-selection.
SEG1 - SEG22 SEG23 - SEG40	22 - 1 80 - 63	O	Segment signals for LCD.
COM1 - COM16	47 - 62	O	Common signals for LCD.

5. FUNCTIONAL DESCRIPTIONS

5.1. Oscillator

SPLC780C oscillator supports not only the internal oscillator operation, but also the external clock operation.

5.2. Control and Display Instructions

Control and display instructions are described in details as follows:

5.2.1. Clear display

	RS	R/W	DB7	DB6	DB5	DB4	DB3	DB2	DB1	DB0
Code	0	0	0	0	0	0	0	0	0	1

It clears the entire display and sets Display Data RAM Address 0 in Address Counter.

5.2.2. Return home

	RS	R/W	DB7	DB6	DB5	DB4	DB3	DB2	DB1	DB0
Code	0	0	0	0	0	0	0	0	1	X

X: Do not care (0 or 1)

It sets Display Data RAM Address 0 in Address Counter and the display returns to its original position. The cursor or blink goes to the most-left side of the display (to the 1st line if 2 lines are displayed). The contents of the Display Data RAM do not change.

5.2.3. Entry mode set

During writing and reading data, it defines cursor moving direction and shifts the display.

	RS	R/W	DB7	DB6	DB5	DB4	DB3	DB2	DB1	DB0
Code	0	0	0	0	0	0	0	1	I / D	S

I / D = 1: Increment, I / D = 0: Decrement.

S = 1: The display shift, S = 0: The display does not shift.

S = 1	I / D = 1	It shifts the display to the left
S = 1	I / D = 0	It shifts the display to the right

5.2.4. Display ON/OFF control

	RS	R/W	DB7	DB6	DB5	DB4	DB3	DB2	DB1	DB0
Code	0	0	0	0	0	0	1	D	C	B

D = 1: Display on, D = 0: Display off

C = 1: Cursor on, C = 0: Cursor off

B = 1: Blinks on, B= 0: Blinks off

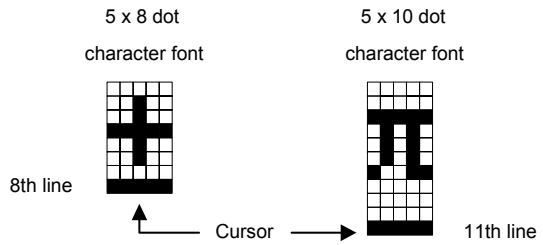

5.2.5. Cursor or display shift

Without changing DD RAM data, it moves cursor and shifts display.

	RS	R/W	DB7	DB6	DB5	DB4	DB3	DB2	DB1	DB0
Code	0	0	0	0	0	1	S/C	R/L	X	X

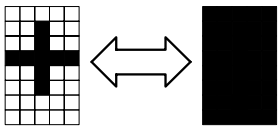

Blink display alternately

S/C	R/L	Description	Address Counter
0	0	Shift cursor to the left	AC = AC - 1
0	1	Shift cursor to the right	AC = AC + 1
1	0	Shift display to the left. Cursor follows the display shift	AC = AC
1	1	Shift display to the right. Cursor follows the display shift	AC = AC

5.2.6. Function set

	RS	R/W	DB7	DB6	DB5	DB4	DB3	DB2	DB1	DB0
Code	0	0	0	0	1	DL	N	F	X	X

X: Do not care (0 or 1)

DL: It sets interface data length.

DL = 1: Data transferred with 8-bit length (DB7 - 0).

DL = 0: Data transferred with 4-bit length (DB7 - 4).

It requires two times to accomplish data transferring.

N: It sets the number of the display line.

N = 0: One-line display.

N = 1: Two-line display.

F: It sets the character font.

F = 0: 5 x 8 dots character font.

F = 1: 5 x 10 dots character font.

N	F	No. of Display Lines	Character Font	Duty Factor
0	0	1	5 x 8 dots	1 / 8
0	1	1	5 x 10 dots	1 / 11
1	X	2	5 x 8 dots	1 / 16

It cannot display two lines with 5 x 10 dots character font.

5.2.7. Set character generator RAM address

	RS	R/W	DB7	DB6	DB5	DB4	DB3	DB2	DB1	DB0
Code	0	0	0	1	a	a	a	a	a	a

It sets Character Generator RAM Address (aaaaaa)2 to the Address Counter.

Character Generator RAM data can be read or written after this setting.

5.2.8. Set display data RAM address

	RS	R/W	DB7	DB6	DB5	DB4	DB3	DB2	DB1	DB0
Code	0	0	1	a	a	a	a	a	a	a

It sets Display Data RAM Address $(aaaaaaa)_2$ to the Address Counter.

Display data RAM can be read or written after this setting.

In one-line display (N = 0),

$(aaaaaaa)_{2:}$ $(00)_{16}$ - $(4F)_{16.}$

In two-line display (N = 1),

$(aaaaaaa)_{2:}$ $(00)_{16}$ - $(27)_{16}$ for the first line,

$(aaaaaaa)_{2:}$ $(40)_{16}$ - $(67)_{16}$ for the second line.

5.2.9. Read busy flag and address

	RS	R/W	DB7	DB6	DB5	DB4	DB3	DB2	DB1	DB0
Code	0	1	BF	a	a	a	a	a	a	a

When BF = 1, it indicates the system is busy now and it will not accept any instruction until not busy (BF = 0). At the same time, the content of Address Counter $(aaaaaaa)_2$ is read.

5.2.10. Write data to character generator RAM or display data RAM

	RS	R/W	DB7	DB6	DB5	DB4	DB3	DB2	DB1	DB0
Code	1	0	d	d	d	d	d	d	d	d

It writes data $(dddddddd)_2$ to character generator RAM or display data RAM.

5.2.11. Read data from character generator RAM or display data RAM

	RS	R/W	DB7	DB6	DB5	DB4	DB3	DB2	DB1	DB0
Code	1	1	d	d	d	d	d	d	d	d

It reads data $(dddddddd)_2$ from character generator RAM or display data RAM.

To read data correctly, do the following:

1). The address of the Character Generator RAM or Display Data RAM or shift the cursor instruction.

2). The " Read " instruction.

5.3. Instruction Table

Instruction	Instruction Code										Description	Execution time (fosc=270KHz)
	RS	RW	DB7	DB6	DB5	DB4	DB3	DB2	DB1	DB0		
Clear Display	0	0	0	0	0	0	0	0	0	1	Write "20H" to DDRAM and set DDRAM address to "00H" from AC	1.52ms
Return Home	0	0	0	0	0	0	0	0	1	-	Set DDRAM address to "00H" from AC and return cursor to its original position if shifted. The contents of DDRAM are not changed.	1.52ms
Entry Mode Set	0	0	0	0	0	0	0	1	I/D	S	Assign cursor moving direction and enable the shift of entire display	38μs
Display ON/ OFF Control	0	0	0	0	0	0	1	D	C	B	Set display(D), cursor(C), and blinking of cursor(B) on/off control bit.	38μs
Cursor or Display Shift	0	0	0	0	0	1	S/C	R/L	-	-	Set cursor moving and display shift control bit, and the direction, without changing of DDRAM data.	38μs
Function Set	0	0	0	0	1	DL	N	F	-	-	Set interface data length (DL: 8-bit/4-bit), numbers of display line (N: 2-line/1-line) and, display font type (F:5x10 dots/5x8 dots)	38μs
Set CGRAM Address	0	0	0	1	AC5	AC4	AC3	AC2	AC1	AC0	Set CGRAM address in address counter.	38μs
Set DDRAM Address	0	0	1	AC6	AC5	AC4	AC3	AC2	AC1	AC0	Set DDRAM address in counter	38μs
Read Busy Flag and Address Counter	0	1	BF	AC6	AC5	AC4	AC3	AC2	AC1	AC0	Whether during internal operation or not can be known by reading BF. The contents of address counter can also be read.	
Write Data to RAM	1	0	D7	D6	D5	D4	D3	D2	D1	D0	Write data into internal RAM (DDRAM/CGRAM).	38μs
Read Data from RAM	1	1	D7	D6	D5	D4	D3	D2	D1	D0	Read data from internal RAM (DDRAM/CGRAM).	38μs

Note: "-": don't care

5.4. 8-Bit Operation and 8-Digit 1-Line Display (Using Internal Reset)

No.	Instruction	Display	Operation
1	Power on. (SPLC780C starts initializing)		Power on reset. No display.
2	Function set RS R/W DB7 DB6 DB5 DB4 DB3 DB2 DB1 DB0 0 0 0 0 1 1 0 0 X X		Set to 8-bit operation and select 1-line display line and character font.
3	Display on / off control 0 0 0 0 0 0 1 1 1 0	_	Display on. Cursor appear.
4	Entry mode set 0 0 0 0 0 0 0 1 1 0	_	Increase address by one. It will shift the cursor to the right when writing to the DD RAM/CG RAM. Now the display has no shift.
5	Write data to CG RAM / DD RAM 1 0 0 1 0 1 0 1 1 1	W_	Write " W ". The cursor is incremented by one and shifted to the right.
6	Write data to CG RAM / DD RAM 1 0 0 1 0 0 0 1 0 1	WE_	Write " E ". The cursor is incremented by one and shifted to the right.
7	:	:	
8	Write data to CG RAM / DD RAM 1 0 0 1 0 0 0 1 0 1	WELCOME_	Write " E ". The cursor is incremented by one and shifted to the right.
9	Entry mode set 0 0 0 0 0 0 0 1 1 1	WELCOME_	Set mode for display shift when writing
10	Write data to CG RAM / DD RAM 1 0 0 0 1 0 0 0 0 0	ELCOME _	Write " "(space). The cursor is incremented by one and shifted to the right.
11	Write data to CG RAM / DD RAM 1 0 0 1 0 0 0 0 1 1	LCOME C_	Write " C ". The cursor is incremented by one and shifted to the right.
12	:	:	
13	Write data to CG RAM / DD RAM 1 0 0 1 0 1 1 0 0 1	COMPAMY_	Write " Y ". The cursor is incremented by one and shifted to the right.
14	Cursor or display shift 0 0 0 0 0 1 0 0 X X	COMPAMY_	Only shift the cursor's position to the left (Y).
15	Cursor or display shift 0 0 0 0 0 1 0 0 X X	COMPAMY_	Only shift the cursor's position to the left (M).
16	Write data to CG RAM / DD RAM 1 0 0 1 0 0 1 1 1 0	OMPANY_	Write " N ". The display moves to the left.
17	Cursor or display shift 0 0 0 0 0 1 1 1 X X	COMPAMY_	Shift the display and the cursor's position to the right.
18	Cursor or display shift 0 0 0 0 0 1 0 1 X X	OMPANY_	Shift the display and the cursor's position to the right.
19	Write data to CG RAM / DD RAM 1 0 0 1 0 0 0 0 0 0	COMPAMY_	Write " " (space). The cursor is incremented by one and shifted to the right.
20	:	:	:
21	Return home 0 0 0 0 0 0 0 0 1 0	WELCOME_	Both the display and the cursor return to the original position (address 0).

5.5. 4-Bit Operation and 8-Digit 1-Line Display (Using Internal Reset)

No.	Instruction	Display	Operation
1	Power on. (SPLC780C starts initializing)		Power on reset. No display.
2	Function set RS R/W DB7 DB6 DB5 DB4 0 0 0 0 1 0		Set to 4-bit operation.
3	0 0 0 0 1 0 0 0 0 0 X X		Set to 4-bit operation and select 1-line display line and character font.
4	0 0 0 0 0 0 0 0 1 1 1 0	_	Display on. Cursor appears.
5	0 0 0 0 0 0 0 0 0 1 1 0	_	Increase address by one. It will shift the cursor to the right when writing to the DD RAM / CG RAM. Now the display has no shift.
6	1 0 0 1 0 1 1 0 0 1 1 1	W_	Write " W ". The cursor is incremented by one and shifted to the right.

5.6. 8-Bit Operation and 8-Digit 2-Line Display (Using Internal Reset)

No.	Instruction	Display	Operation
1	Power on. (SPLC780C starts initializing)		Power on reset. No display.
2	Function set RS R/W DB7 DB6 DB5 DB4 DB3 DB2 DB1 DB0 0 0 0 0 1 1 1 0 X X		Set to 8-bit operation and select 2-line display line and 5 x 8 dot character font.
3	Display on / off control 0 0 0 0 0 0 1 1 1 0	_	Display on. Cursor appear.
4	Entry mode set 0 0 0 0 0 0 0 1 1 0	_	Increase address by one. It will shift the cursor to the right when writing to the DD RAM / CG RAM. Now the display has no shift.
5	Write data to CG RAM / DD RAM 1 0 0 1 0 1 0 1 1 1	W_	Write " W ". The cursor is incremented by one and shifted to the right.
6	:	:	:
7	Write data to CG RAM / DD RAM 1 0 0 1 0 0 0 1 0 1	WELCOME_	Write " E ". The cursor is incremented by one and shifted to the right.
8	Set DD RAM address 0 0 1 1 0 0 0 0 0 0	WELCOME _	It sets DD RAM's address. The cursor is moved to the beginning position of the 2nd line.
9	Write data to CG RAM / DD RAM 1 0 0 1 0 1 0 1 0 0	WELCOME T_	Write " T ". The cursor is incremented by one and shifted to the right.
10	:	:	:
11	Write data to CG RAM / DD RAM 1 0 0 1 0 1 0 1 0 0	WELCOME TO PART_	Write " T ". The cursor is incremented by one and shifted to the right.

No.	Instruction	Display	Operation
12	Entry mode set 0 0 0 0 0 0 0 1 1 1	WELCOME TO PART_	When writing, it sets mode for the display shift.
13	Write data to CG RAM / DD RAM 1 0 0 1 0 1 1 0 0 1	ELCOME O PARTY_	Write " Y ". The cursor is incremented by one and shifted to the right.
14	:	:	:
15	Return home 0 0 0 0 0 0 0 0 1 0	WELCOME TO PARTY	Both the display and the cursor return to the original position (address 0).

5.7. Reset Function

At power on, SPLC780C starts the internal auto-reset circuit and executes the initial instructions. The initial procedures are shown as follows:

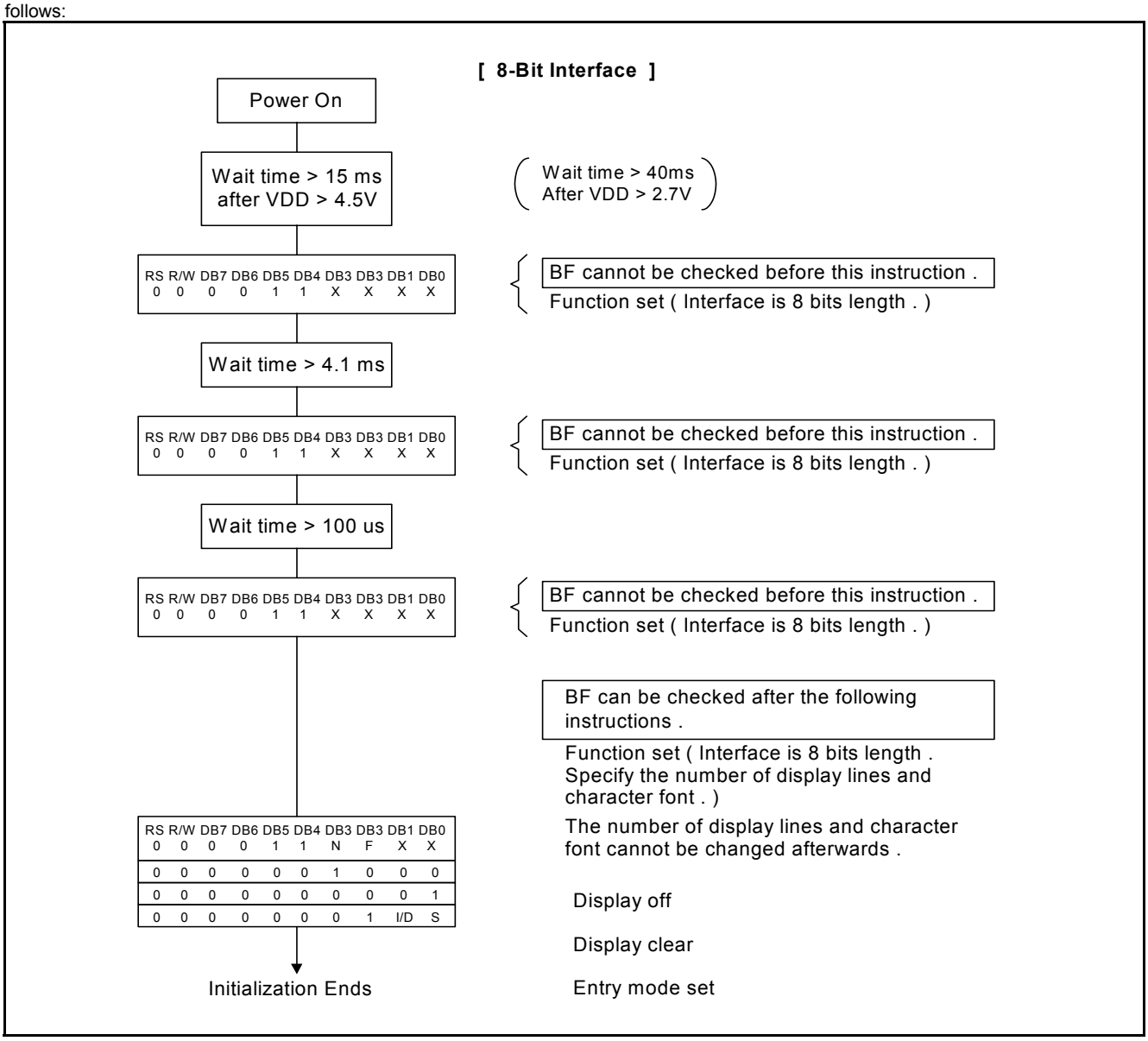

[4-Bit Interface]

Power On

Wait time > 15 ms after VDD > 4.5V

(Wait time > 40ms After VDD > 2.7V)

RS	R/W	DB7	DB6	DB5	DB4
0	0	0	0	1	1

BF cannot be checked before this instruction .
Function set (Interface is 8 bits length .)

Wait time > 4.1 ms

RS	R/W	DB7	DB6	DB5	DB4
0	0	0	0	1	1

BF cannot be checked before this instruction .
Function set (Interface is 8 bits length .)

Wait time > 100 us

RS	R/W	DB7	DB6	DB5	DB4
0	0	0	0	1	1

BF cannot be checked before this instruction .
Function set (Interface is 8 bits length .)

BF can be checked after the following instructions .

RS	R/W	DB7	DB6	DB5	DB4	
0	0	0	0	1	0	Function set (Set interface to be 4 bits length) Interface is 8 bits length .
0	0	0	0	1	0	
0	0	N	F	X	X	Function set (Interface is 4 bits length . Specify the number of the display lines and character font .)
0	0	0	0	0	0	
0	0	1	0	0	0	
0	0	0	0	0	0	The number of display lines and character font cannot be changed afterwards .
0	0	0	0	0	1	
0	0	0	0	0	0	Display off
0	0	0	1	I/D	S	Display clear

Entry mode set

Initialization Ends

5.8. Display Data RAM (DD RAM)

The 80-bit DD RAM is normally used for storing display data. Those DD RAM not used for display data can be used as general data RAM. Its address is configured in the Address Counter. The relationships between Display Data RAM Address and LCD's position are depicted as follows.

1-line display , 80 display characters

1	2	3	4	5	6		79	80	← Display position
00	01	02	03	04	05	– – – – – – – – – – – – –	4E	4F	← Display data RAM address

(Example) 1-line display , 8 display characters

1	2	3	4	5	6	7	8	← Display position
00	01	02	03	04	05	06	07	← Display data RAM address

When the display shift operation is performed , the display data RAM's address moves as :

(i) Left shift

01	02	03	04	05	06	06	07	08

(ii) Right shift

4F	00	01	02	03	04	05	06

5.9. Timing Generation Circuit

The timing generating circuit is able to generate timing signals to the internal circuits. In order to prevent the internal timing interface, the MPU access timing and the RAM access timing are generated independently.

5.10. LCD Driver Circuit

Total of 16 commons and 40 segments signal drivers are valid in the LCD driver circuit. When a program specifies the character fonts and line numbers, the corresponding common signals output drive-waveforms and the others still output unselected waveforms.

5.11. Character Generator ROM (CG ROM)

Using 8-bit character code, the character generator ROM generates 5 x 8 dots or 5 x 10 dots character patterns. It also can generate 192's 5 x 8 dots character patterns and 64's 5 x 10 dots character patterns.

5.12. Character Generator RAM (CG RAM)

Users can easily change the character patterns in the character generator RAM through program. It can be written to 5 x 8 dots, 8-character patterns or 5 x 10 dots for 4-character patterns.

The following diagram shows the SPLC780C character patterns:

Correspondence between Character Codes and Character Patterns.

The relationships between Character Generator RAM Addresses, Character Generator RAM Data (character patterns), and Character Codes are depicted as follows:

5.12.1. 5 x 8 dot character patterns

Character Code (DD RAM Data)								CG RAM Address						Character Patterns (CG RAM Data)								
b7	b6	b5	b4	b3	b2	b1	b0	b5	b4	b3	b2	b1	b0	b7	b6	b5	b4	b3	b2	b1	b0	
0	0	0	0	X	0	0	0	0	0	0	0	0	0	X	X	X	1	1	1	1	1	Character Pattern Example (1)
											0	0	1				0	0	1	0	0	
											0	1	0				0	0	1	0	0	
											0	1	1				0	0	1	0	0	
											1	0	0				0	0	1	0	0	
											1	0	1				0	0	1	0	0	
											1	1	0				0	0	1	0	0	
											1	1	1				0	0	0	0	0	Cursor Position
0	0	0	0	X	0	0	1	0	0	1	0	0	0	X	X	X	0	1	1	1	0	Character Pattern Example (2)
											0	0	1				0	0	1	0	0	
											0	1	0				0	0	1	0	0	
											0	1	1				0	0	1	0	0	
											1	0	0				0	0	1	0	0	
											1	0	1				0	0	1	0	0	
											1	1	0				0	1	1	1	0	
											1	1	1				0	0	0	0	0	

Note1: ▨ It means that the bit0~2 of the character code correspond to the bit3~5 of the CG RAM address.
Note2: ▤ These areas are not used for display, but can be used for the general data RAM.
Note3: When all of the bit4-7 of the character code are 0, CG RAM character patterns are selected.
Note4: " 1 ": Selected, " 0 " : No selected , " X " : Do not care (0 or 1).
Note5: For example (1), set character code (b2 = b1 = b0 = 0, b3 = 0 or 1, b7-b4 = 0) to display " T ". That means character code (00) 16,and (08) 16 can display " T " character.
Note6: The bits 0-2 of the character code RAM is the character pattern line position. The 8th line is the cursor position and display is formed by logical OR with the cursor.

5.12.2. 5 X 10 dot character patterns

Character Code (DD RAM Data)								CG RAM Address						Character Patterns (CG RAM Data)								
b7	b6	b5	b4	b3	b2	b1	b0	b5	b4	b3	b2	b1	b0	b7	b6	b5	b4	b3	b2	b1	b0	
0	0	0	0	X	0	0	X	0	0	0	0	0	0	X	X	X	1	0	0	0	1	Character Pattern Example (1)
										0	0	0	1				1	0	0	0	1	
										0	0	1	0				1	0	0	0	1	
										0	0	1	1				1	0	0	0	1	
										0	1	0	0				1	0	0	0	1	
										0	1	0	1				1	0	0	0	1	
										0	1	1	0				1	0	0	0	1	
										0	1	1	1				1	0	0	0	1	
										1	0	0	0				1	0	0	0	1	
										1	0	0	1				1	1	1	1	1	Cursor Position
										1	0	1	0				0	0	0	0	0	←
										1	0	1	1									
										1	1	0	0									
										1	1	0	1	X	X	X	X	X	X	X	X	
										1	1	1	0									
										1	1	1	1									

Note1: ▨ It means that the bit1~2 of the character code correspond to the bit4~5 of the CG RAM address.
Note2: ▤ These areas are not used for display, but can be used for the general data RAM.
Note3: When all of the bit4-7 of the character code are 0, CG RAM character patterns are selected.
Note4: " 1 “: Selected, " 0 “: No selected, " X “: Do not care (0 or 1).
Note5: For example (1), set character code (b2 = b1 = 0, b3 = b0 = 0 or 1, b7-b4 = 0) to display “ U ”. That means all of the character codes (00) 16, (01) 16, (08) 16,and (09) 16 can display “ U ” character.
Note6: The bits 0-3 of the character code RAM is the character pattern line position. The 11th line is the cursor position and display is formed by logical OR with the cursor.

5.13. Cursor/Blink Control Circuit

This circuit generates the cursor or blink in the cursor / blink control circuit. The cursor or the blink appears in the digit at the Display Data RAM Address defined in the Address Counter. When the Address Counter is (07) 16, the cursor position is shown as belows:

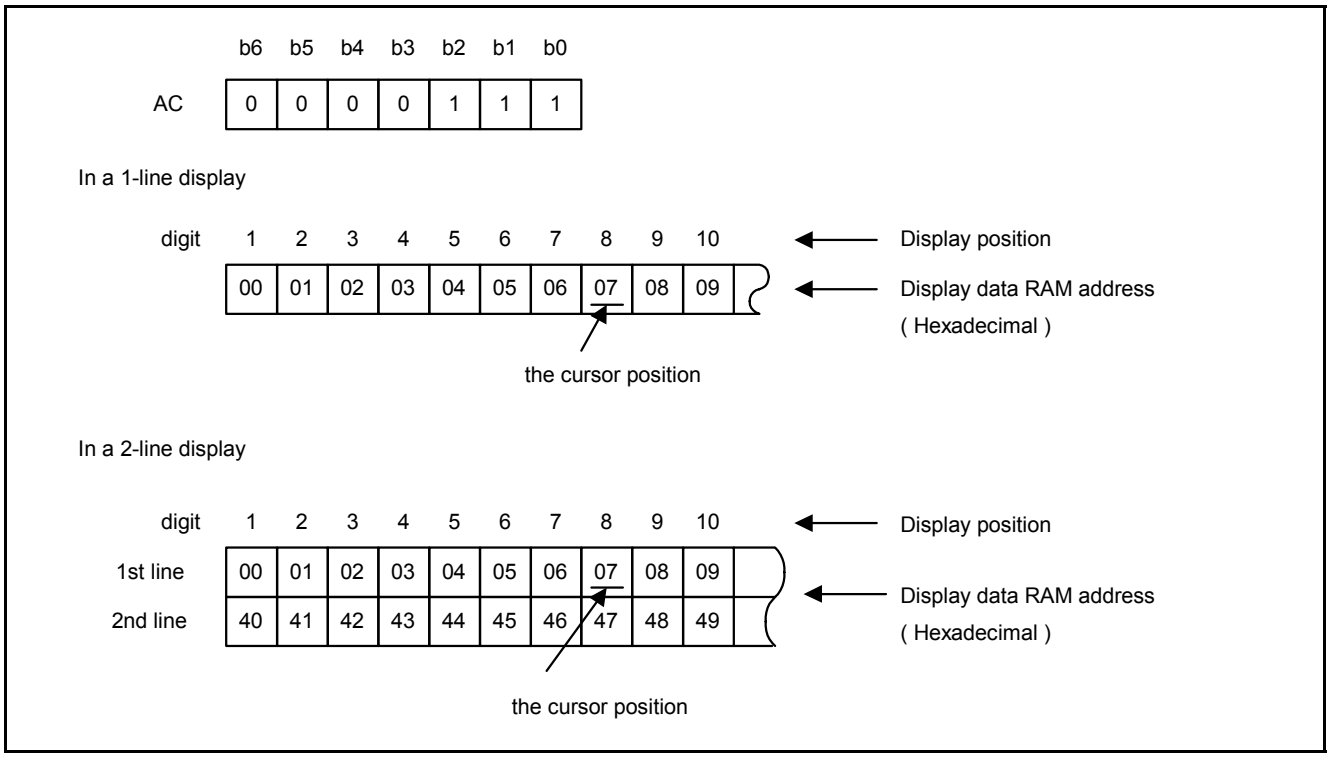

5.14. Interfacing to MPU

There are two types of data operations: 4-bit and 8-bit operations. Using 4-bit MPU, the interfacing 4-bit data is transferred by 4-busline (DB4 to DB7). Thus, DB0 to DB3 bus lines are not used. Using 4-bit MPU to interface 8-bit data requires two times transferring. First, the higher 4-bit data is transferred by 4-busline (for 8-bit operation, DB7 to DB4). Secondly, the lower 4-bit data is transferred by 4-busline (for 8-bit operation, DB3 to DB0). For 8-bit MPU, the 8-bit data is transferred by 8-buslines (DB0 to DB7).

5.15. Supply Voltage for LCD Drive

Different voltages can be supplied to SPLC780C's pins (V5 - 1) for obtaining LCD drive-waveform. The relationships between bias, duty factor and supply voltages are shown as belows:

Duty Factor / Supply Voltage	1/8, 1/11	1/16
	1/4	1/5
V1	VDD – 1/4 V_{LCD}	VDD – 1/5 V_{LCD}
V2	VDD – 1/2 V_{LCD}	VDD – 2/5 V_{LCD}
V3	VDD – 1/2 V_{LCD}	VDD – 3/5 V_{LCD}
V4	VDD – 3/4 V_{LCD}	VDD – 4/5 V_{LCD}
V5	VDD – V_{LCD}	VDD – V_{LCD}

5.15.1. The power connections for LCD (1/4 Bias, 1/5 Bias) are shown belows:

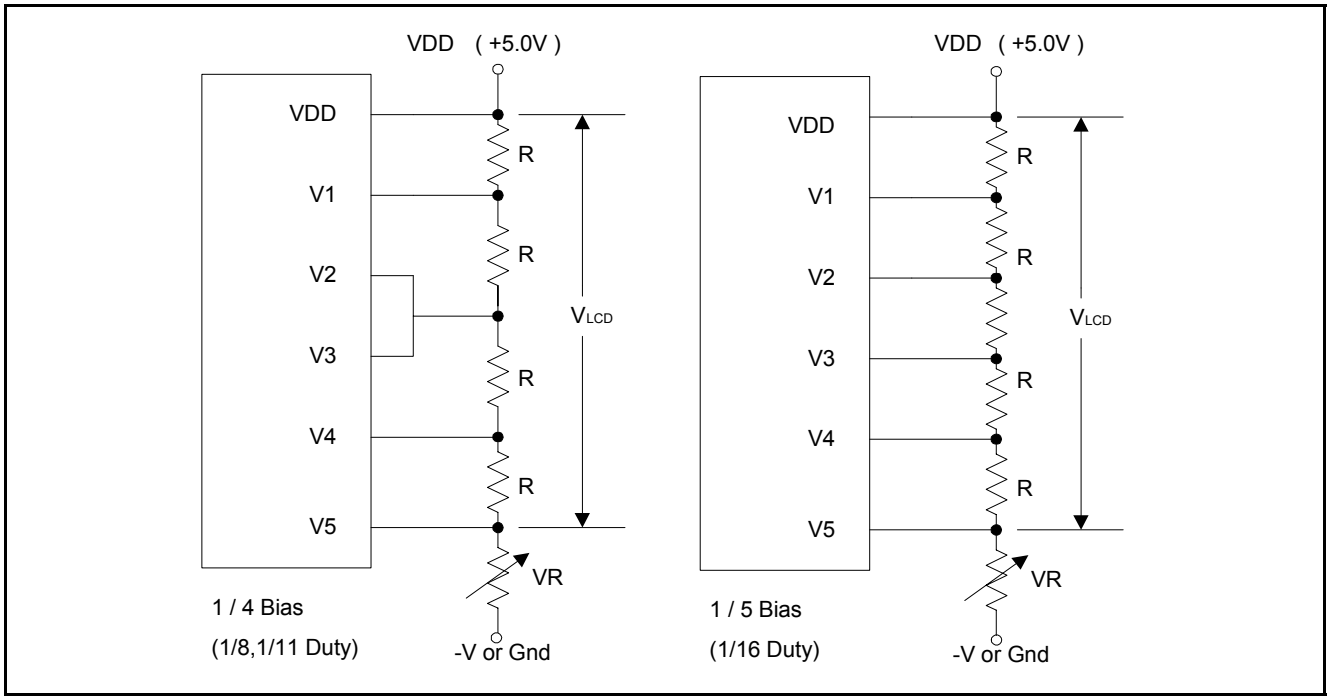

The bypass-capacitor improves the LCD display quality.

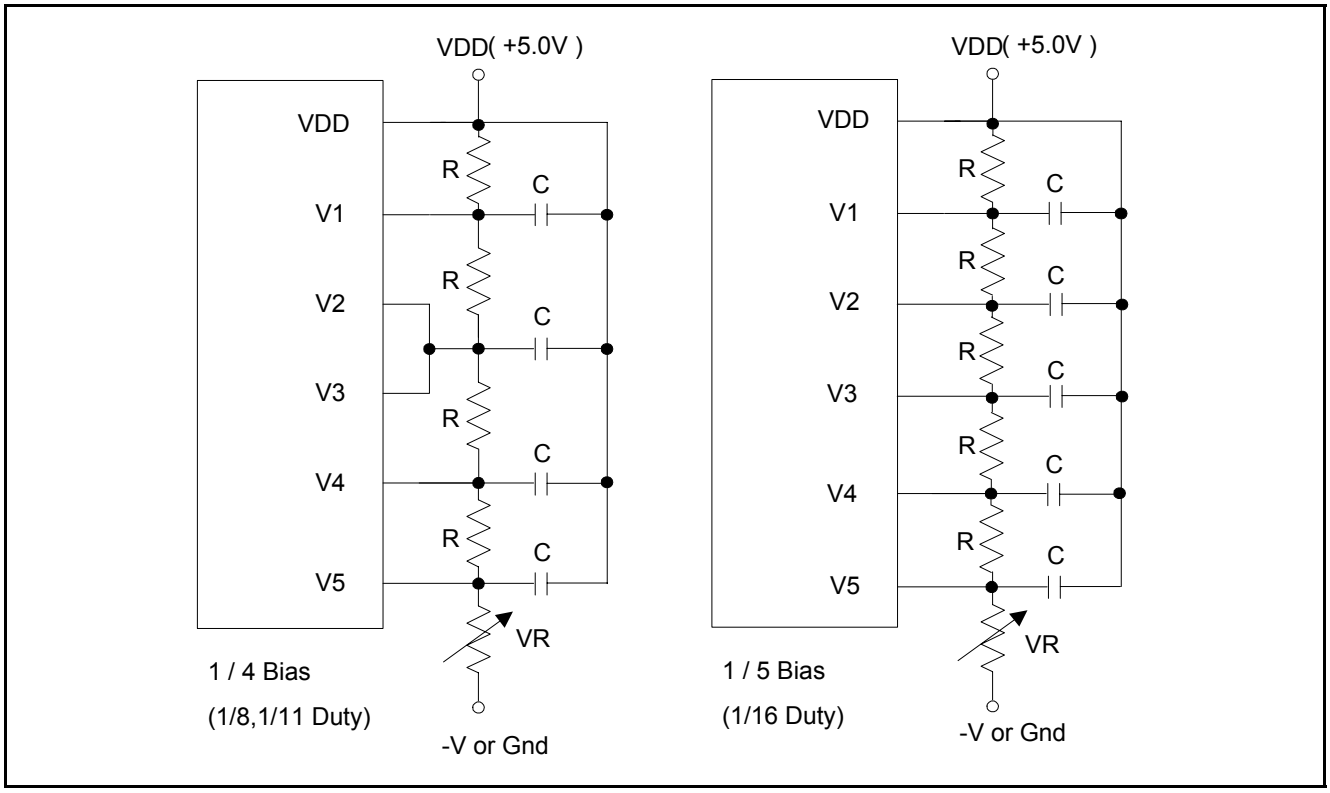

The bias voltage must have the following relations:

VDD > V1 > V2 ≧ V3 > V4 > V5.

5.15.2. The relationship between LCD frame's frequency and oscillator's frequency.

(Assume the oscillation frequency is 250KHz, 1 clock cycle time = 4.0μs)

5.15.2.1. 1/8 Duty, TYPE-B waveform

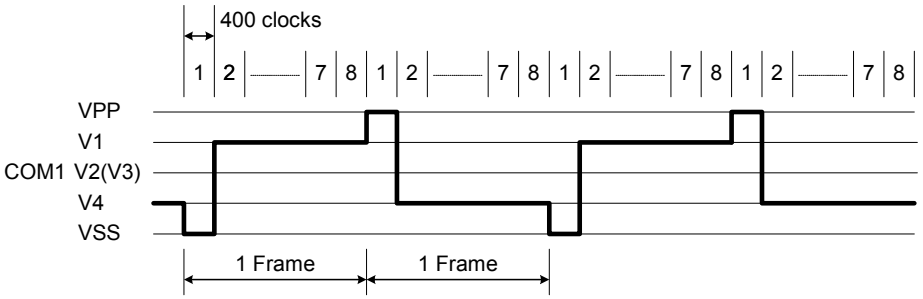

1 frame = 4(μs) x 400 x 8 = 12800(μs) = 12.8ms

$$\text{Frame frequency} = \frac{1}{12.8(\text{ms})} = 78.1(\text{Hz})$$

5.15.2.2. 1/11 Duty, TYPE-B waveform

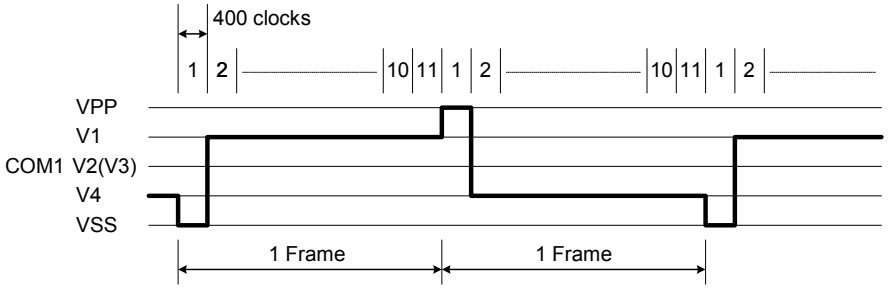

1 frame = 4(μs) x 400 x 11 = 17600(μs) = 17.6ms

$$\text{Frame frequency} = \frac{1}{17.6(\text{ms})} = 56.8(\text{Hz})$$

5.15.2.3. 1/16 Duty, TYPE-B waveform

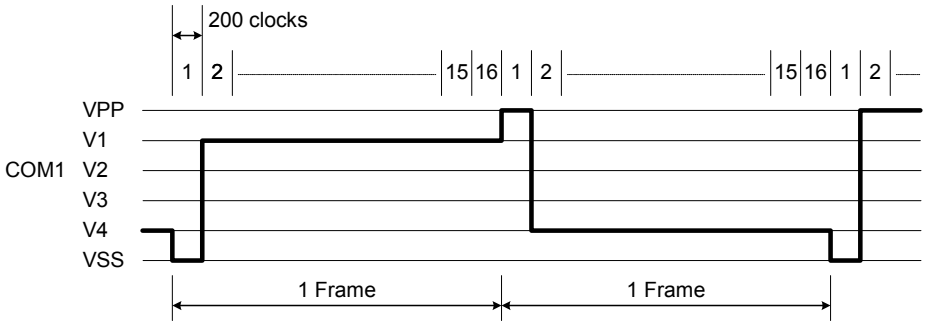

1 frame = 4(μs) x 200 x 16 = 12800(μs) = 12.8ms

$$\text{Frame frequency} = \frac{1}{12.8(\text{ms})} = 78.1(\text{Hz})$$

5.16. REGISTER --- IR (Instruction Register) and DR (Data Register)

SPLC780C contains two 8-bit registers: Instruction Register (IR) and Data Register (DR). Using combinations of the RS pin and the R/W pin selects the IR and DR, see below:

RS	R/W	Operation
0	0	IR write (Display clear, etc.)
0	1	Read busy flag (DB7) and Address Counter (DB0 - DB6)
1	0	DR write (DR to Display data RAM or Character generator RAM)
1	1	DR read (Display data RAM or Character generator RAM to DR)

The IR can be written by MPU, but it cannot be read by MPU.

5.17. Busy Flag (BF)

When RS = 0 and R/W = 1, the busy flag is output to DB7. As the busy flag =1, SPLC780C is in busy state and does not accept any instruction until the busy flag = 0.

5.18. Address Counter (AC)

The Address Counter assigns addresses to Display Data RAM and Character Generator RAM. When an instruction for address is written in IR, the address information is sent from IR to AC. After writing to/reading from Display Data RAM or Character Generator RAM, AC is automatically incremented by one (or decremented by one). The contents of AC are output to DB0 - DB6 when RS = 0 and R/W = 1.

5.19. I/O Port Configuration

5.19.1. Input port: E

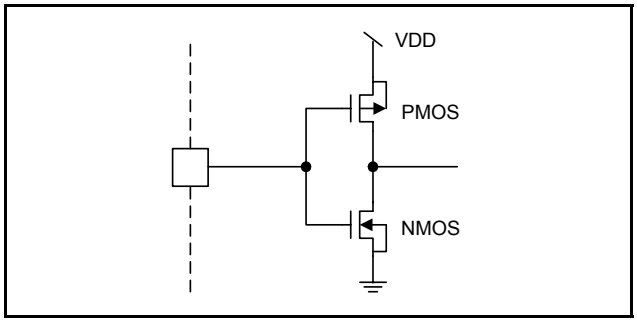

5.19.2. Input port: R / W, RS

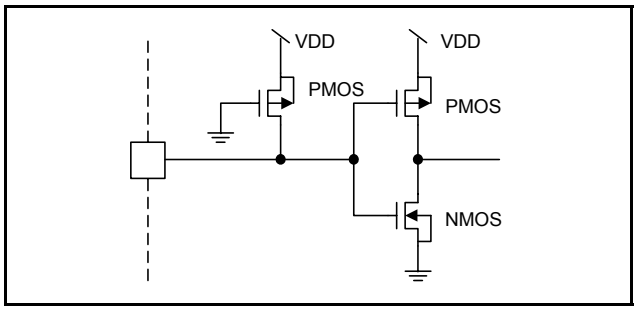

5.19.3. Output port: CL1, CL2, M, D

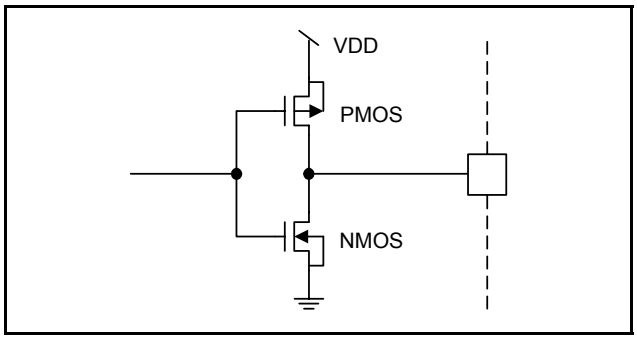

5.19.4. Input / Output port: DB7 - 0

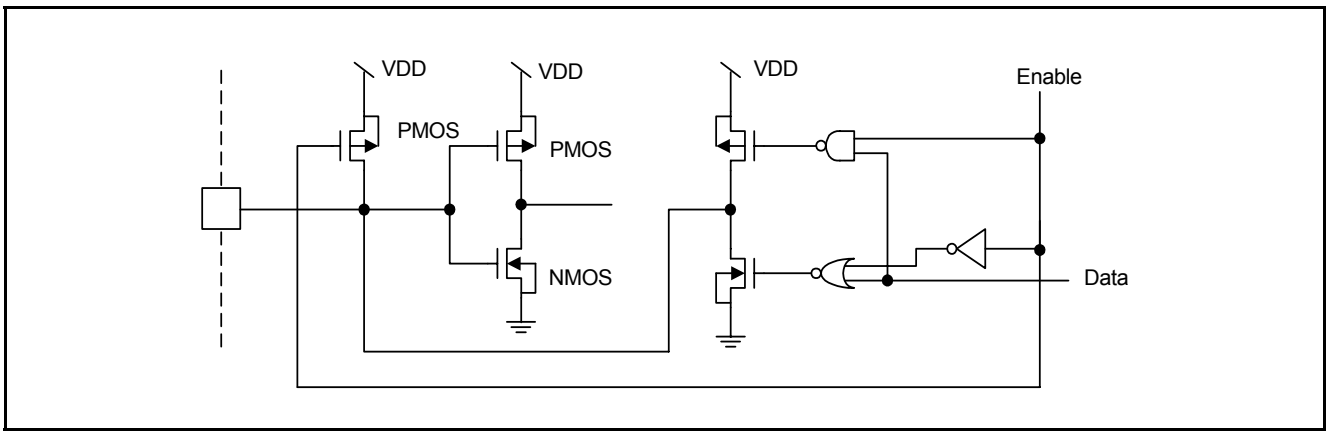

6. ELECTRICAL SPECIFICATIONS

6.1. Absolute Maximum Ratings

Characteristics	Symbol	Ratings
Operating Voltage	VDD	-0.3V to +7.0V
Driver Supply Voltage	V_{LCD}	VDD - 12V to VDD + 0.3V
Input Voltage Range	V_{IN}	-0.3V to VDD + 0.3V
Operating Temperature	T_A	-30℃ to +80℃
Storage Temperature	T_{STO}	-55℃ to +125℃

Note: Stresses beyond those given in the Absolute Maximum Rating table may cause operational errors or damage to the device. For normal operational conditions see AC/DC Electrical Characteristics.

6.2. DC Characteristics (VDD = 2.7V to 4.5V, T_A = 25℃)

Characteristics	Symbol	Limit			Unit	Test Condition
		Min.	Typ.	Max.		
Operating Current	I_{DD}	-	0.2	0.4	mA	External clock (Note)
Input High Voltage	V_{IH1}	0.7VDD	-	VDD	V	Pins:(E, RS, R/W, DB0 - DB7)
Input Low Voltage	V_{IL1}	-0.3	-	0.55	V	
Input High Voltage	V_{IH2}	0.7VDD	-	VDD	V	Pin OSC1
Input Low Voltage	V_{IL2}	-0.2	-	0.2VDD	V	
Input High Current	I_{IH}	-1.0	-	1.0	μA	Pins: (RS, R/W, DB0 - DB7)
Input Low Current	I_{IL}	-5.0	-15	-30	μA	VDD = 3.0V
Output High Voltage (TTL)	V_{OH1}	0.75VDD	-	-	V	I_{OH} = - 0.1mA Pins: DB0 - DB7
Output Low Voltage (TTL)	V_{OL1}	-	-	0.2VDD	V	I_{OL} = 0.1mA Pins: DB0 - DB7
Output High Voltage (CMOS)	V_{OH2}	0.8VDD	-	-	V	I_{OH} = - 40μA, Pins: CL1, CL2, M, D
Output Low Voltage (CMOS)	V_{OL2}	-	-	0.2VDD	V	I_{OL} = 40μA, Pins: CL1, CL2, M, D
Driver ON Resistance (COM)	R_{COM}	-	-	20	KΩ	I_O = ±50μA, V_{LCD} = 4.0V Pins: COM1 - COM16
Driver ON Resistance (SEG)	R_{SEG}	-	-	30	KΩ	I_O = ±50μA, V_{LCD} = 4.0V Pins: SEG1 - SEG40
LCD Voltage	V_{LCD}	3.0	-	11	V	VDD-V5, 1/4 bias or 1/5 bias

Note: F_{OSC} = 250KHz, VDD = 3.0V, pin E = "L", RS, R/W, DB0 - DB7 are open, all outputs are no loads.

6.3. AC Characteristics (VDD = 2.7V to 4.5V, T_A = 25℃)

6.3.1. Internal clock operation

Characteristics	Symbol	Limit			Unit	Test Condition
		Min.	Typ.	Max.		
OSC Frequency	F_{OSC1}	190	270	350	KHz	VDD = 3.0V, Rf = 75KΩ±2%

6.3.2. External clock operation

Characteristics	Symbol	Limit			Unit	Test Condition
		Min.	Typ.	Max.		
External Frequency	F_{OSC2}	125	250	350	KHz	
Duty Cycle		45	50	55	%	
Rise/Fall Time	t r, t f	-	-	0.2	µs	

6.3.3. Write mode (Writing data from MPU to SPLC780C)

Characteristics	Symbol	Limit			Unit	Test Condition
		Min.	Typ.	Max.		
E Cycle Time	t_C	1000	-	-	ns	Pin E
E Pulse Width	t_{PW}	450	-	-	ns	Pin E
E Rise/Fall Time	t_R, t_F	-	-	25	ns	Pin E
Address Setup Time	t_{SP1}	60	-	-	ns	Pins: RS, R/W, E
Address Hold Time	t_{HD1}	20	-	-	ns	Pins: RS, R/W, E
Data Setup Time	t_{SP2}	195	-	-	ns	Pins: DB0 - DB7
Data Hold Time	t_{HD2}	10	-	-	ns	Pins: DB0 - DB7

6.3.4. Read mode (Reading data from SPLC780C to MPU)

Characteristics	Symbol	Limit			Unit	Test Condition
		Min.	Typ.	Max.		
E Cycle Time	t_C	1000	-	-	ns	Pin E
E Pulse Width	t_W	450	-	-	ns	Pin E
E Rise/Fall Time	t_R, t_F	-	-	25	ns	Pin E
Address Setup Time	t_{SP1}	60	-	-	ns	Pins: RS, R/W, E
Address Hold Time	t_{HD1}	20	-	-	ns	Pins: RS, R/W, E
Data Output Delay Time	t_D	-	-	360	ns	Pins: DB0 - DB7
Data hold time	t_{HD2}	5.0	-	-	ns	Pin DB0 - DB7

6.4. DC Characteristics (VDD = 4.5V to 5.5V, T_A = 25℃)

Characteristics	Symbol	Limit			Unit	Test Condition
		Min.	Typ.	Max.		
Operating Current	I_{DD}	-	0.55	0.8	mA	External clock (Note)
Input High Voltage	V_{IH1}	2.2	-	VDD	V	Pins:(E, RS, R/W, DB0 - DB7)
Input Low Voltage	V_{IL1}	-0.3	-	0.6	V	
Input High Voltage	V_{IH2}	VDD-1	-	VDD	V	Pin OSC1
Input Low Voltage	V_{IL2}	-0.2	-	1.0	V	Pin OSC1
Input High Current	I_{IH}	-2.0	-	2.0	μA	Pins: (RS, R/W, DB0 - DB7) VDD = 5.0V
Input Low Current	I_{IL}	-20	-50	-100	μA	
Output High Voltage (TTL)	V_{OH1}	2.4	-	VDD	V	I_{OH} = - 0.1mA Pins: DB0 - DB7
Output Low Voltage (TTL)	V_{OL1}	-	-	0.4	V	I_{OL} = 0.1mA Pins: DB0 - DB7
Output High Voltage (CMOS)	V_{OH2}	0.9VDD	-	VDD	V	I_{OH} = - 40μA, Pins: CL1, CL2, M, D
Output Low Voltage (CMOS)	V_{OL2}	-	-	0.1VDD	V	I_{OL} = 40μA, Pins: CL1, CL2, M, D
Driver ON Resistance (COM)	R_{COM}	-	-	20	KΩ	I_O = ±50μA, V_{LCD} = 4.0V Pins: COM1 - COM16
Driver ON Resistance (SEG)	R_{SEG}	-	-	30	KΩ	I_O = ±50μA, V_{LCD} = 4.0V Pins: SEG1 - SEG40
LCD Voltage	V_{LCD}	3.0	-	11	V	VDD-V5, 1/4 bias or 1/5 bias

Note: F_{osc} = 250KHz, VDD = 5.0V, pin E = "L", RS, R/W, DB0 - DB7 are open, all outputs are no loads.

6.5. AC Characteristics (VDD = 4.5V to 5.5V, T_A = 25℃)

6.5.1. Internal clock operation

Characteristics	Symbol	Limit			Unit	Test Condition
		Min.	Typ.	Max.		
OSC Frequency	F_{OSC1}	190	270	350	KHz	VDD = 5.0V, Rf = 91KΩ±2%

6.5.2. External clock operation

Characteristics	Symbol	Limit			Unit	Test Condition
		Min.	Typ.	Max.		
External Frequency	F_{OSC2}	125	250	350	KHz	
Duty Cycle		45	50	55	%	
Rise/Fall Time	t r, t f	-	-	0.2	μs	

6.5.3. Write mode (Writing Data from MPU to SPLC780C)

Characteristics	Symbol	Limit			Unit	Test Condition
		Min.	Typ.	Max.		
E Cycle Time	t_C	500	-	-	ns	Pin E
E Pulse Width	t_{PW}	230	-	-	ns	Pin E
E Rise/Fall Time	t_R, t_F	-	-	20	ns	Pin E
Address Setup Time	t_{SP1}	40	-	-	ns	Pins: RS, R/W, E
Address Hold Time	t_{HD1}	10	-	-	ns	Pins: RS, R/W, E
Data Setup Time	t_{SP2}	80	-	-	ns	Pins: DB0 - DB7
Data Hold Time	t_{HD2}	10	-	-	ns	Pins: DB0 - DB7

6.5.4. Read mode (Reading Data from SPLC780C to MPU)

Characteristics	Symbol	Limit			Unit	Test Condition
		Min.	Typ.	Max.		
E Cycle Time	t_C	500	-	-	ns	Pin E
E Pulse Width	t_W	230	-	-	ns	Pin E
E Rise/Fall Time	t_R, t_F	-	-	20	ns	Pin E
Address Setup Time	t_{SP1}	40	-	-	ns	Pins: RS, R/W, E
Address Hold Time	t_{HD1}	10	-	-	ns	Pins: RS, R/W, E
Data Output Delay Time	t_D	-	-	120	ns	Pins: DB0 - DB7
Data hold time	t_{HD2}	5.0	-	-	ns	Pin DB0 - DB7

6.5.5. Interface mode with LCD Driver (SPLC100A1)

Characteristics	Symbol	Limit			Unit	Test Condition
		Min.	Typ.	Max.		
Clock pulse width high	t_{PWH}	800	-	-	ns	Pins: CL1, CL2
Clock pulse width low	t_{PWL}	800	-	-	ns	Pins: CL1, CL2
Clock setup time	t_{CSP}	500	-	-	ns	Pins: CL1, CL2
Data setup time	t_{DSP}	300	-	-	ns	Pins: D
Data hold time	t_{HD}	300	-	-	ns	Pins: D
M delay time	t_D	-1000	-	1000	ns	Pins: M

6.5.6. Write mode timing diagram (Writing Data from MPU to SPLC780C)

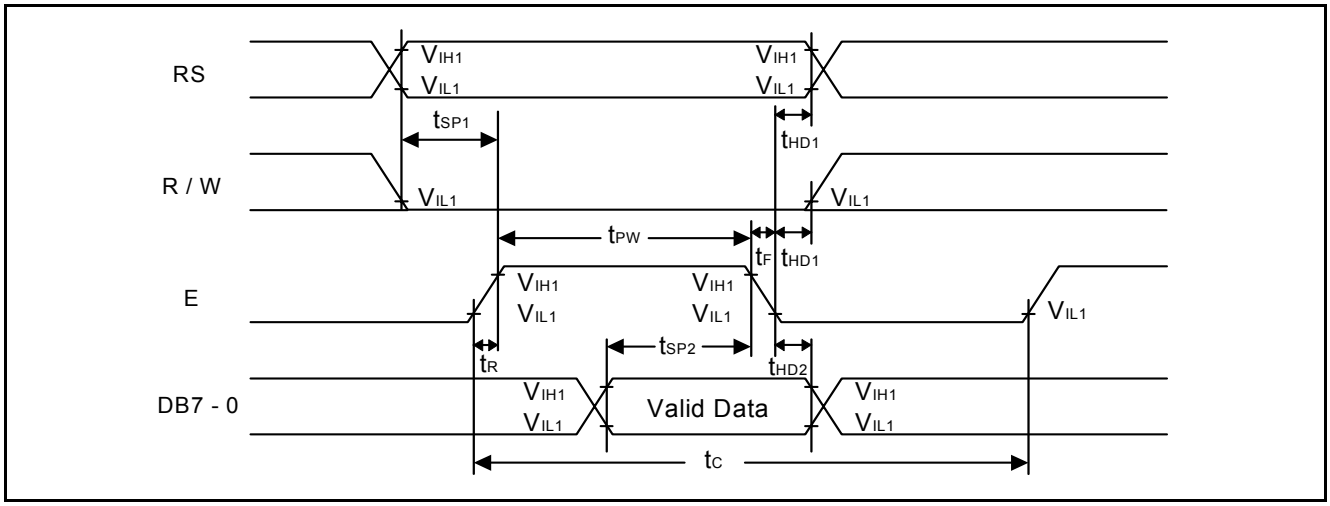

6.5.7. Read mode timing diagram (Reading Data from SPLC780C to MPU)

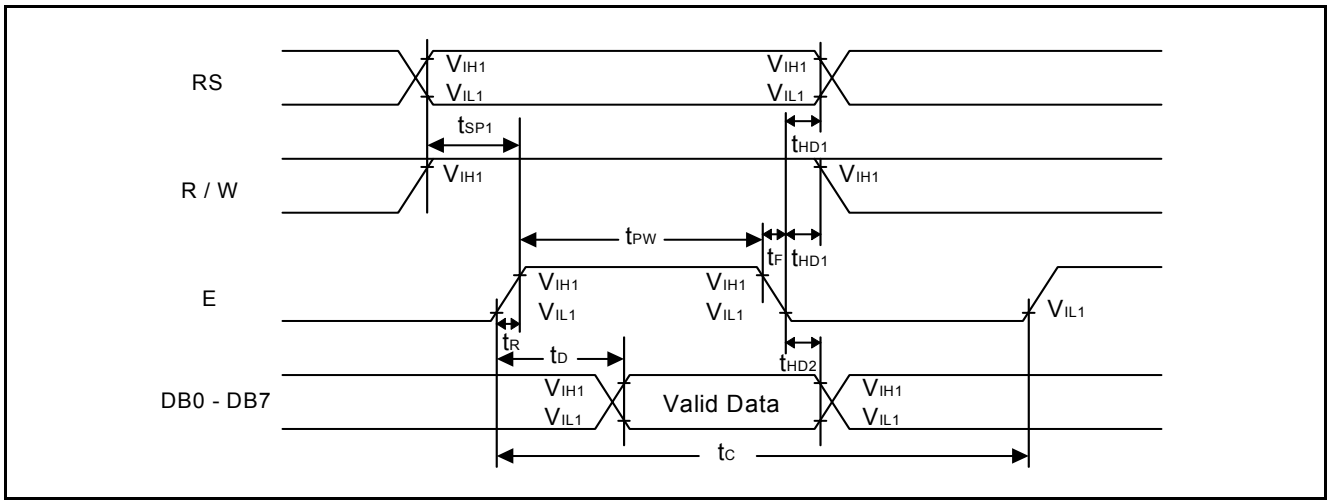

6.5.8. Interface mode with SPLC100A1 timing diagram

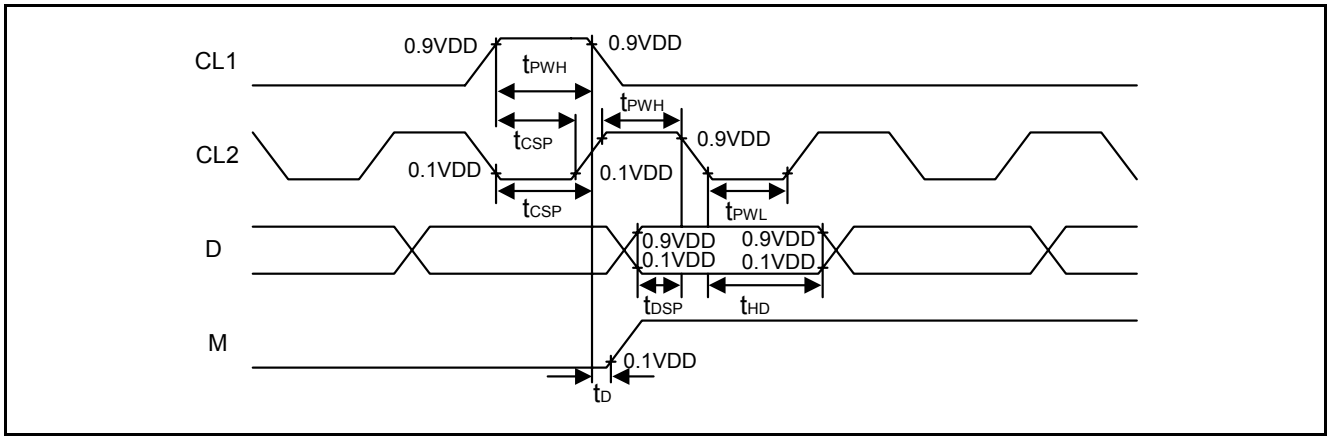

7. APPLICATION CIRCUITS

7.1. R-Oscillator

The oscillation resistor R_f is used only for the internal oscillaotr operation mode.

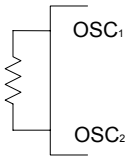

R_f : 75.0KΩ±2% (when VDD = 3.0V)
R_f : 91KΩ± 2% (when VDD = 5.0V)

Since the oscillation frequency varies depending on the OSC_1 and OSC_2 pin capacitance, the wiring length to these pins should be minimized.

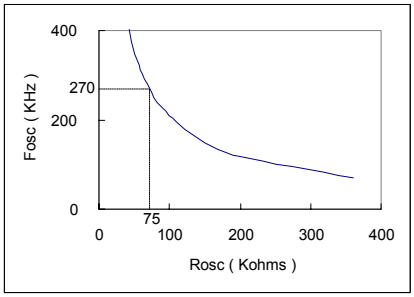

VDD = 3.0V

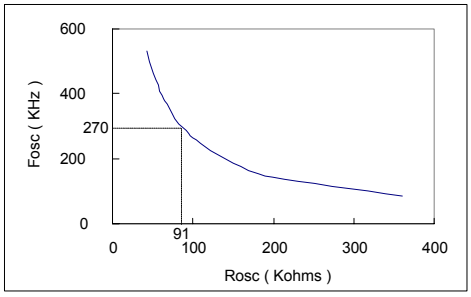

VDD = 5.0V

7.2. Interface to MPU

7.2.1. Interface to 8-bit MPU (6805)

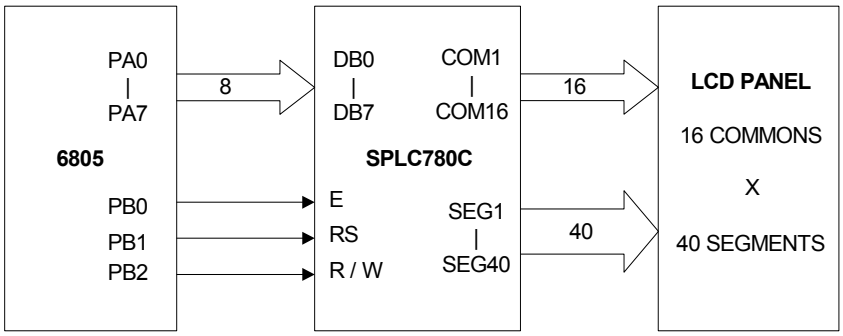

7.2.2. Interface to 8-bit MPU (Z80)

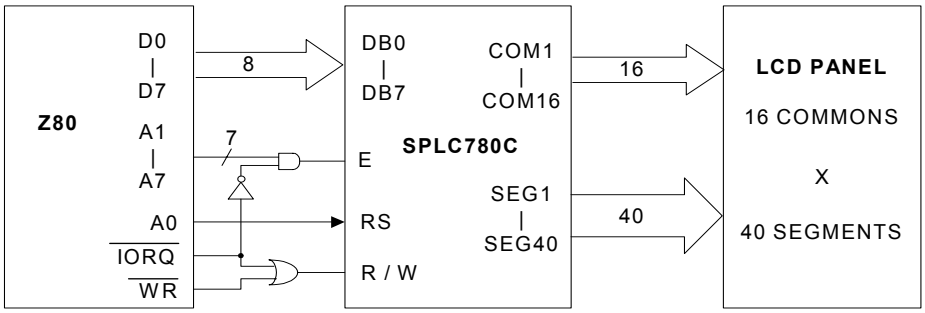

7.3. SPLC780C Application Circuit

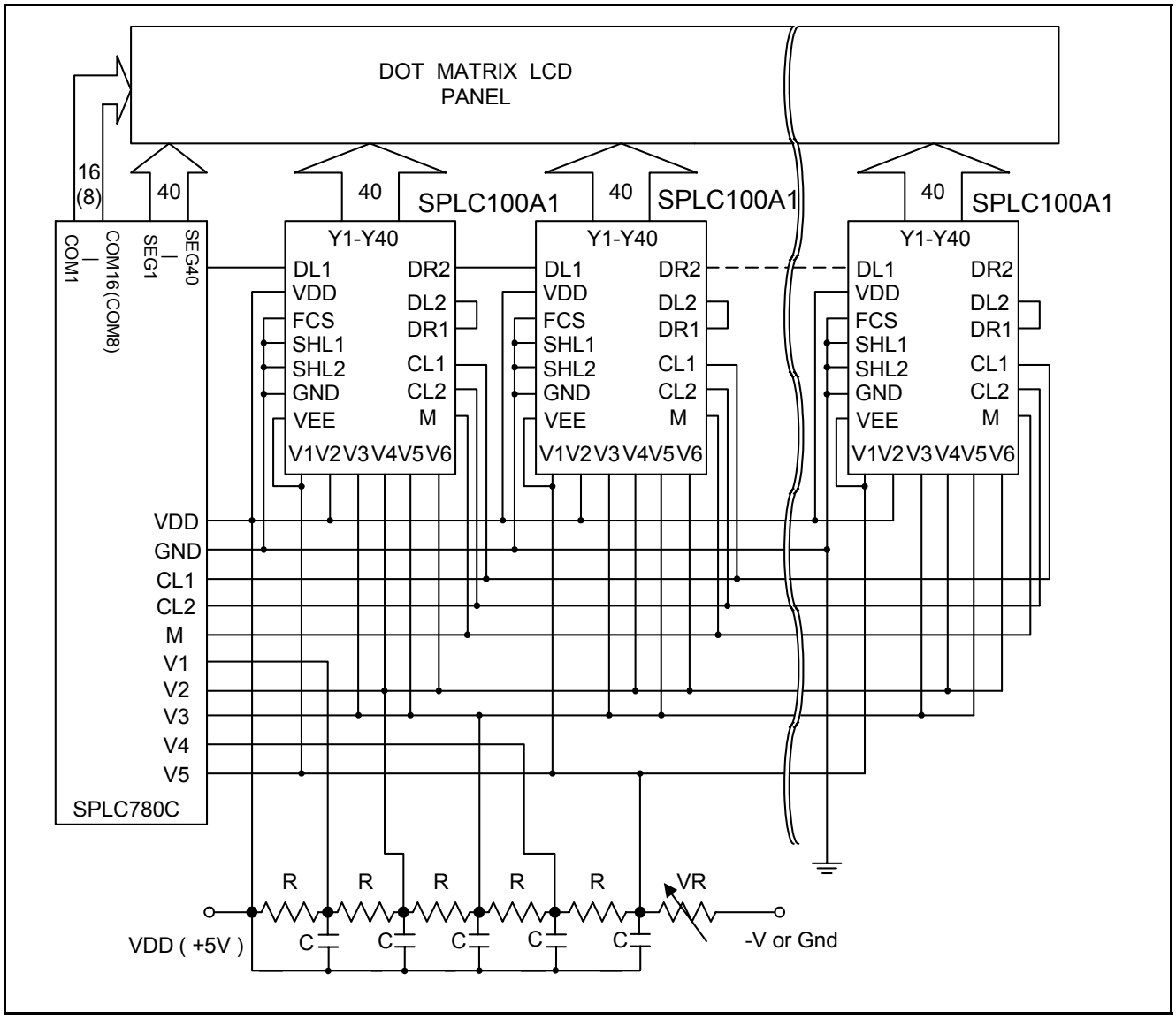

7.4. Applications for LCD

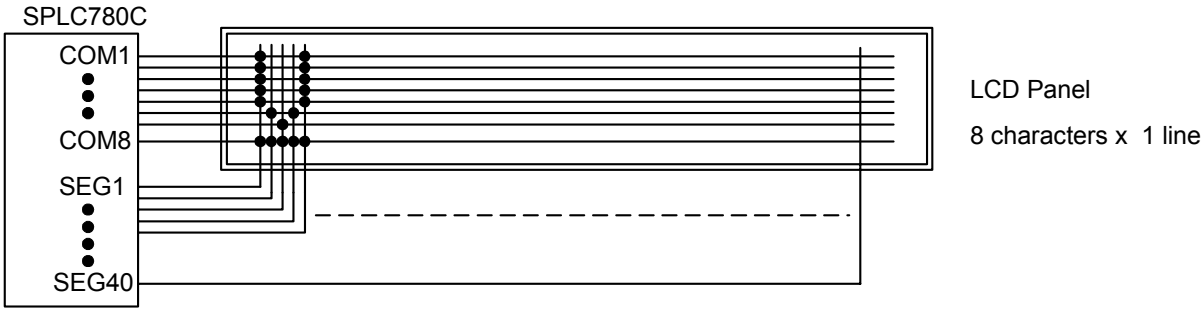

(Example 1) : 5 x 8 dots , 8 characters x 1 line [1 / 4 Bias , 1 / 8 Duty]

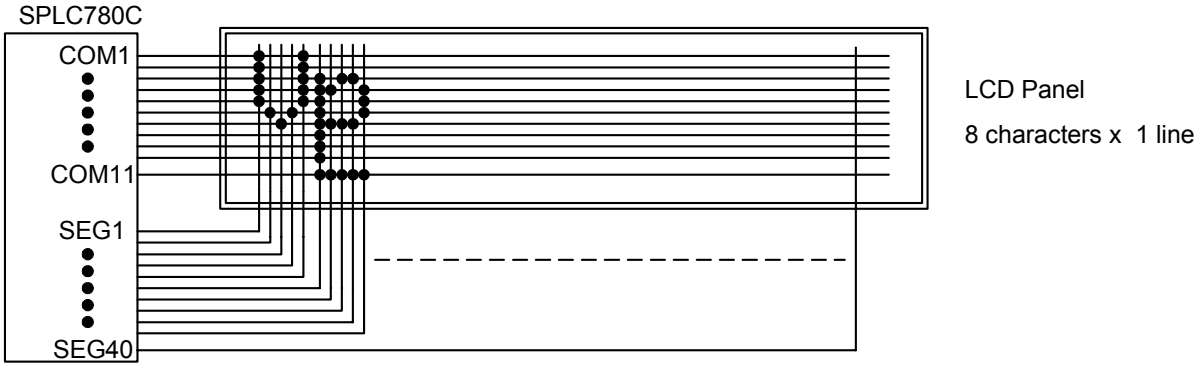

(Example 2) : 5 x 10 dots , 8 characters x 1 line [1 / 4 Bias , 1 / 11 Duty]

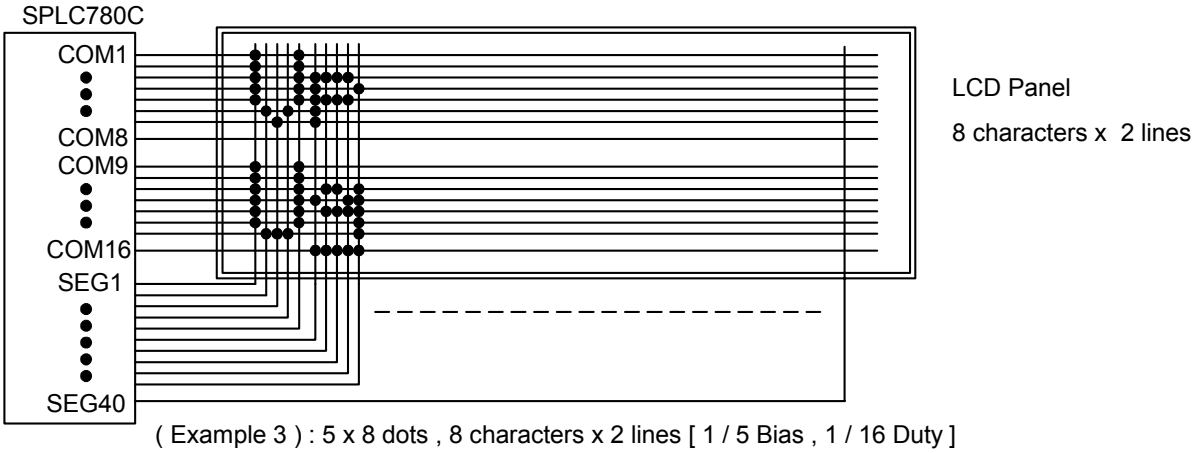

(Example 3) : 5 x 8 dots , 8 characters x 2 lines [1 / 5 Bias , 1 / 16 Duty]

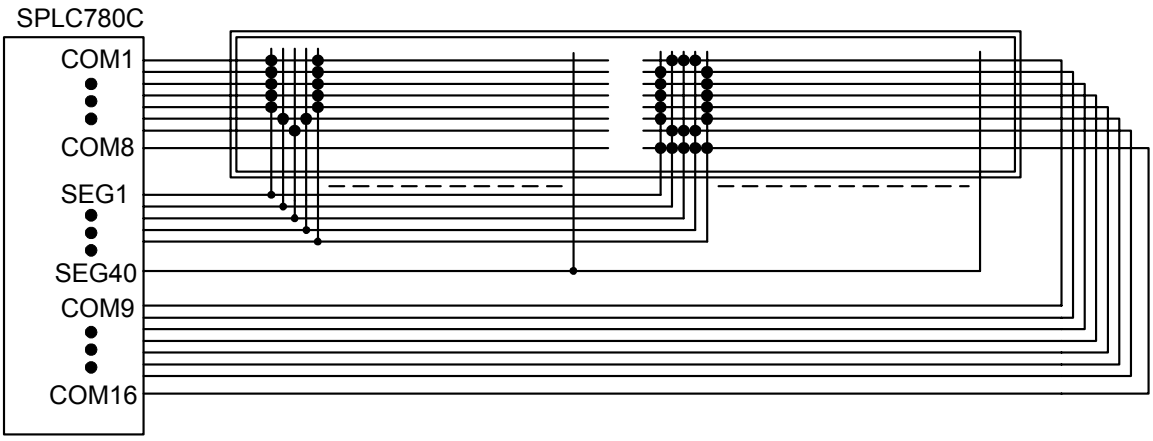

(Example 4) : 5 x 8 dots , 16 characters x 1 line [1 / 5 Bias , 1 / 16 Duty]

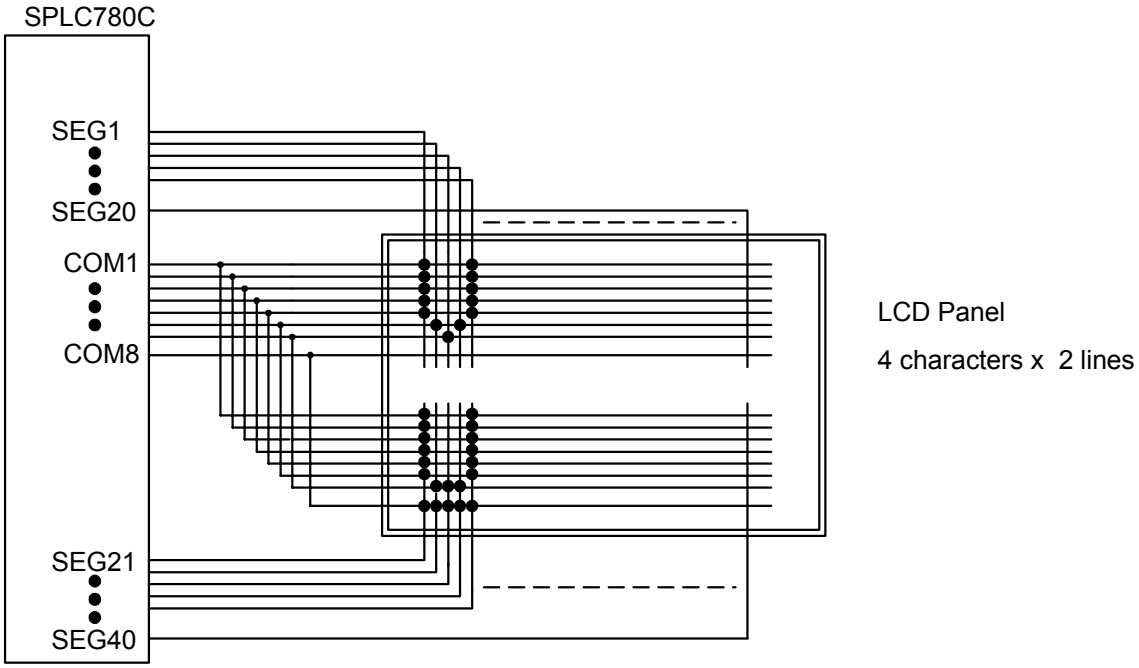

(Example 5) : 5 x 8 dots , 4 characters x 2 lines [1 / 4 Bias , 1 / 8 Duty]

8. CHARACTER GENERATOR ROM

8.1. SPLC780C - 01

8.2. SPLC780C - 02

Upper 4 bit / Lower 4 bit	LLLL	LLLH	LLHL	LLHH	LHLL	LHLH	LHHL	LHHH	HLLL	HLLH	HLHL	HLHH	HHLL	HHLH	HHHL	HHHH
LLLL																
LLLH																
LLHL																
LLHH																
LHLL																
LHLH																
LHHL																
LHHH																
HLLL																
HLLH																
HLHL																
HLHH																
HHLL																
HHLH																
HHHL																
HHHH																

8.3. SPLC780C - 03

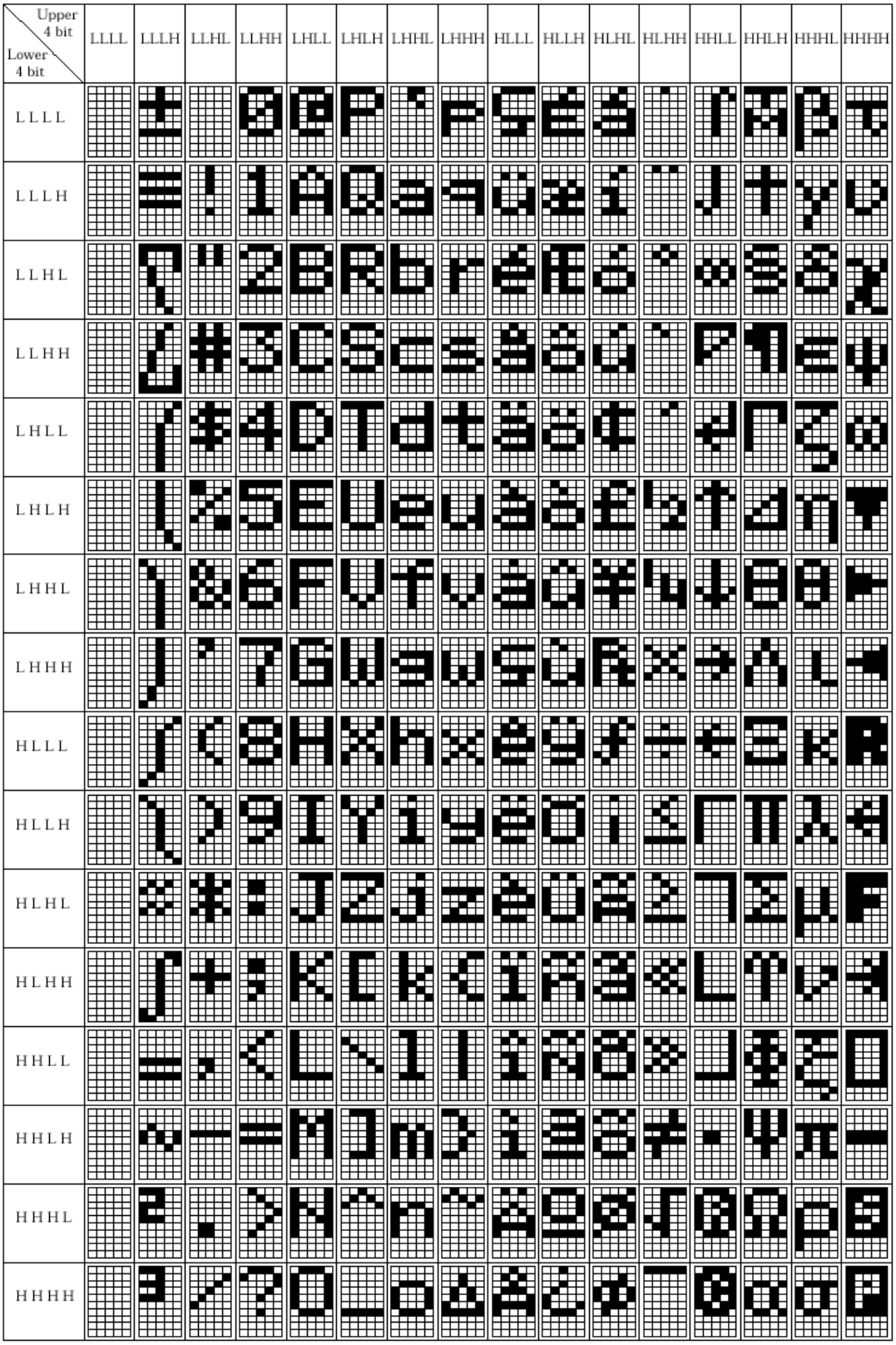

8.4. SPLC780C - 08

Upper 4 bit / Lower 4 bit	LLLL	LLLH	LLHL	LLHH	LHLL	LHLH	LHHL	LHHH	HLLL	HLLH	HLHL	HLHH	HHLL	HHLH	HHHL	HHHH
LLLL																
LLLH																
LLHL																
LLHH																
LHLL																
LHLH																
LHHL																
LHHH																
HLLL																
HLLH																
HLHL																
HLHH																
HHLL																
HHLH																
HHHL																
HHHH																

8.5. SPLC780C - 11

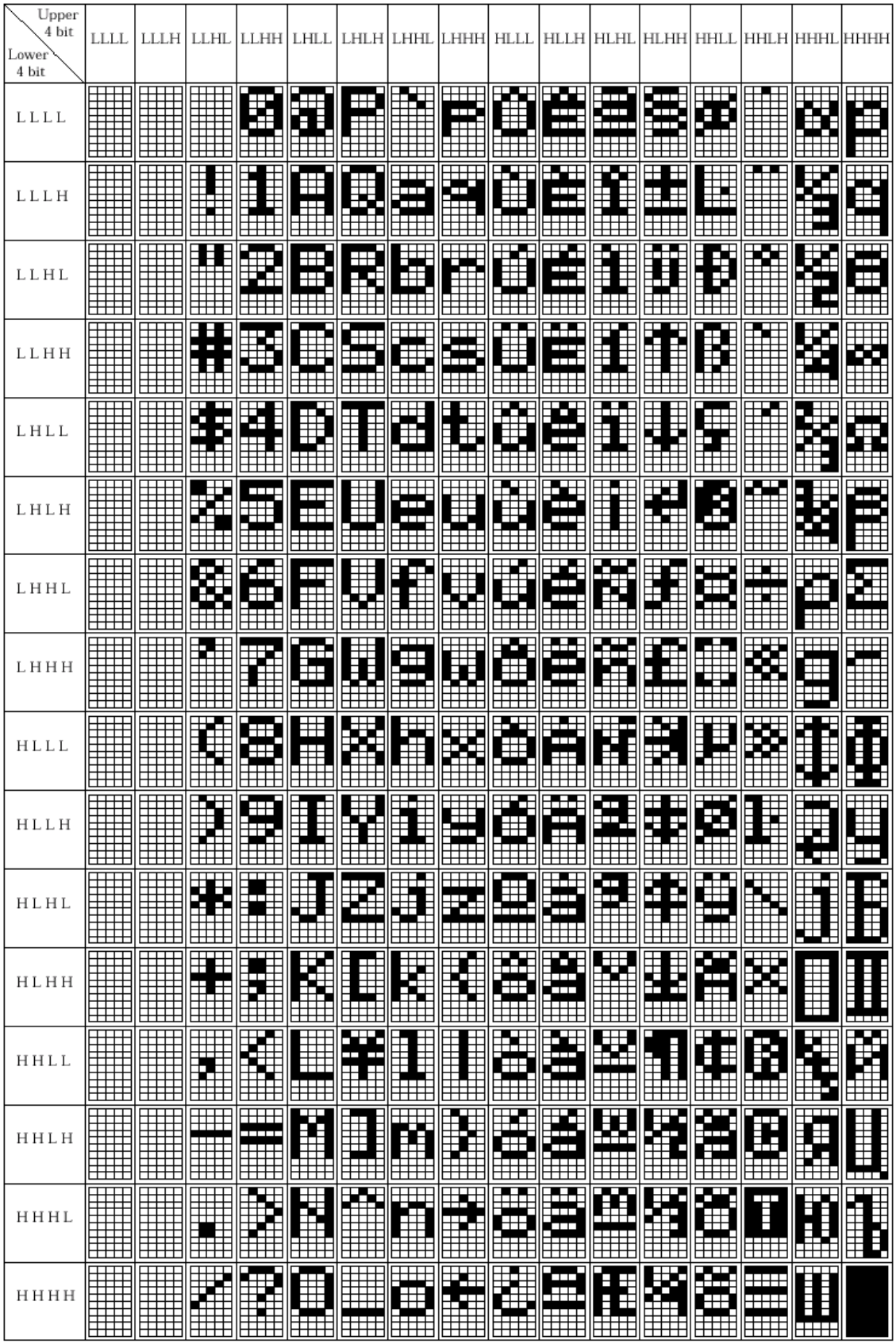

8.6. SPLC780C - 12

8.7. SPLC780C - 13

8.8. SPLC780C - 14

8.9. SPLC780C - 15

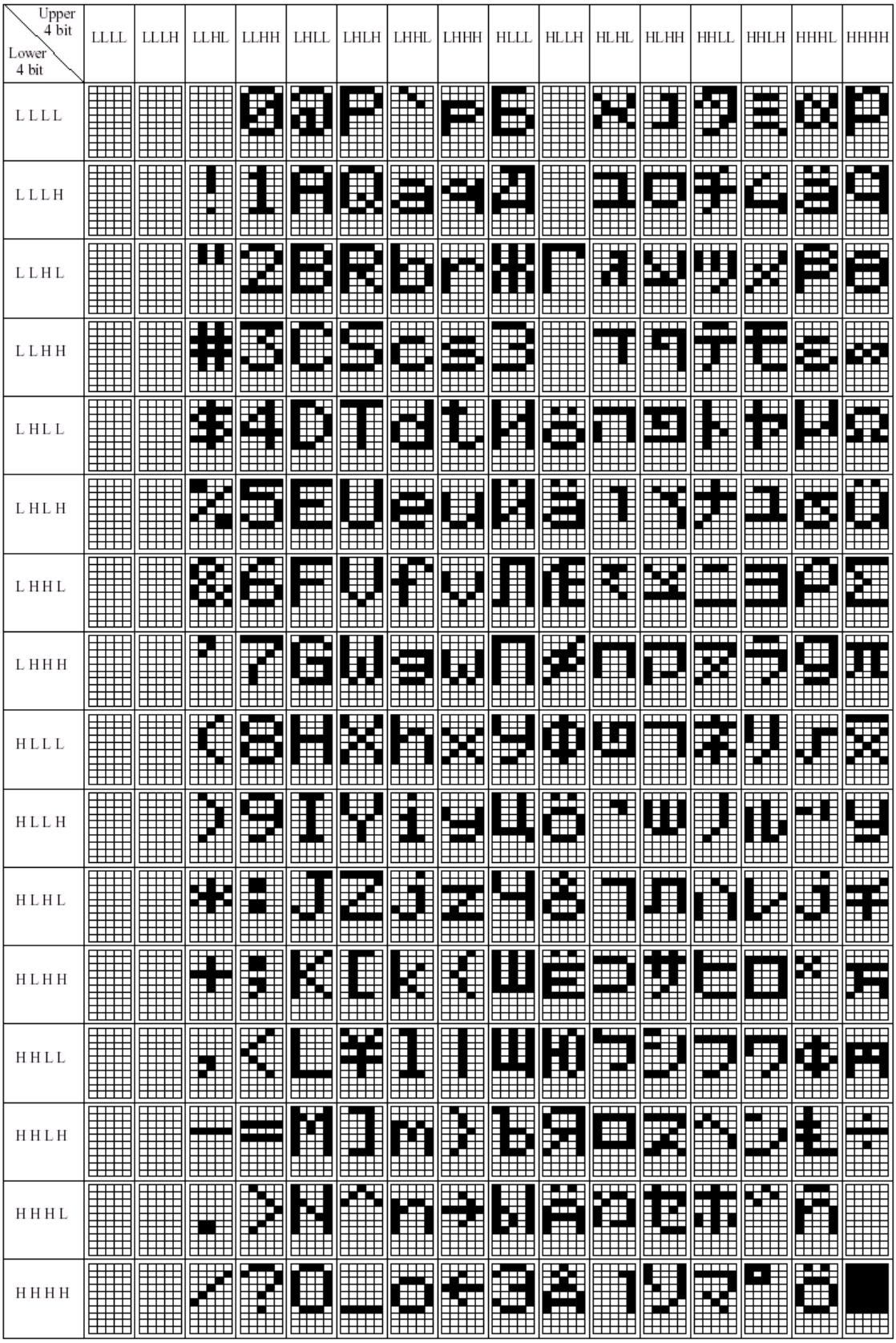

8.10. SPLC780C - 17

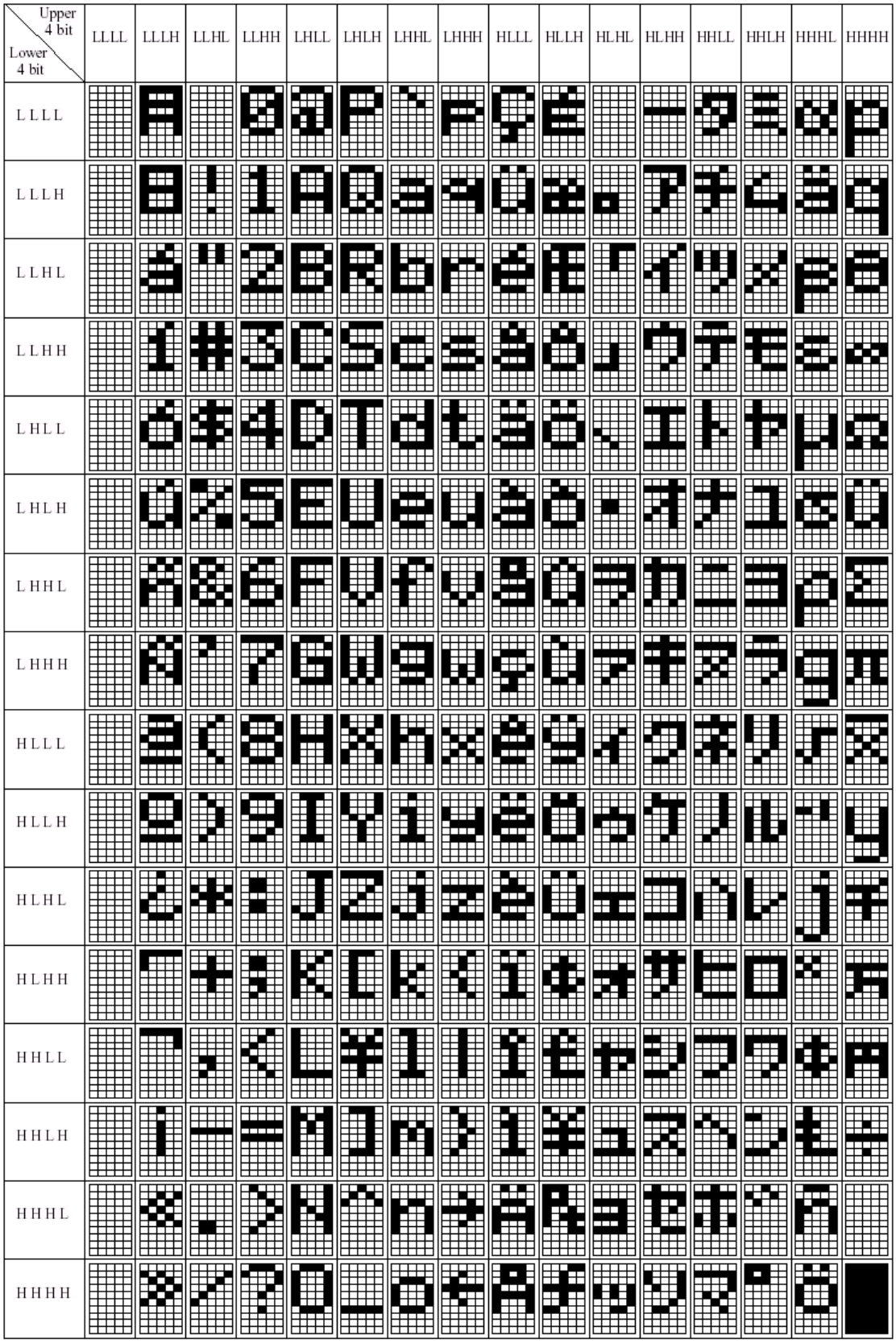

8.11. SPLC780C - 18

Upper 4 bit / Lower 4 bit	LLLL	LLLH	LLHL	LLHH	LHLL	LHLH	LHHL	LHHH	HLLL	HLLH	HLHL	HLHH	HHLL	HHLH	HHHL	HHHH
LLLL																
LLLH																
LLHL																
LLHH																
LHLL																
LHLH																
LHHL																
LHHH																
HLLL																
HLLH																
HLHL																
HLHH																
HHLL																
HHLH																
HHHL																
HHHH																

8.12. SPLC780C - 19

Upper 4 bit / Lower 4 bit	LLLL	LLLH	LLHL	LLHH	LHLL	LHLH	LHHL	LHHH	HLLL	HLLH	HLHL	HLHH	HHLL	HHLH	HHHL	HHHH
LLLL																
LLLH																
LLHL																
LLHH																
LHLL																
LHLH																
LHHL																
LHHH																
HLLL																
HLLH																
HLHL																
HLHH																
HHLL																
HHLH																
HHHL																
HHHH																

9. PACKAGE/PAD LOCATIONS

9.1. PAD Assignment

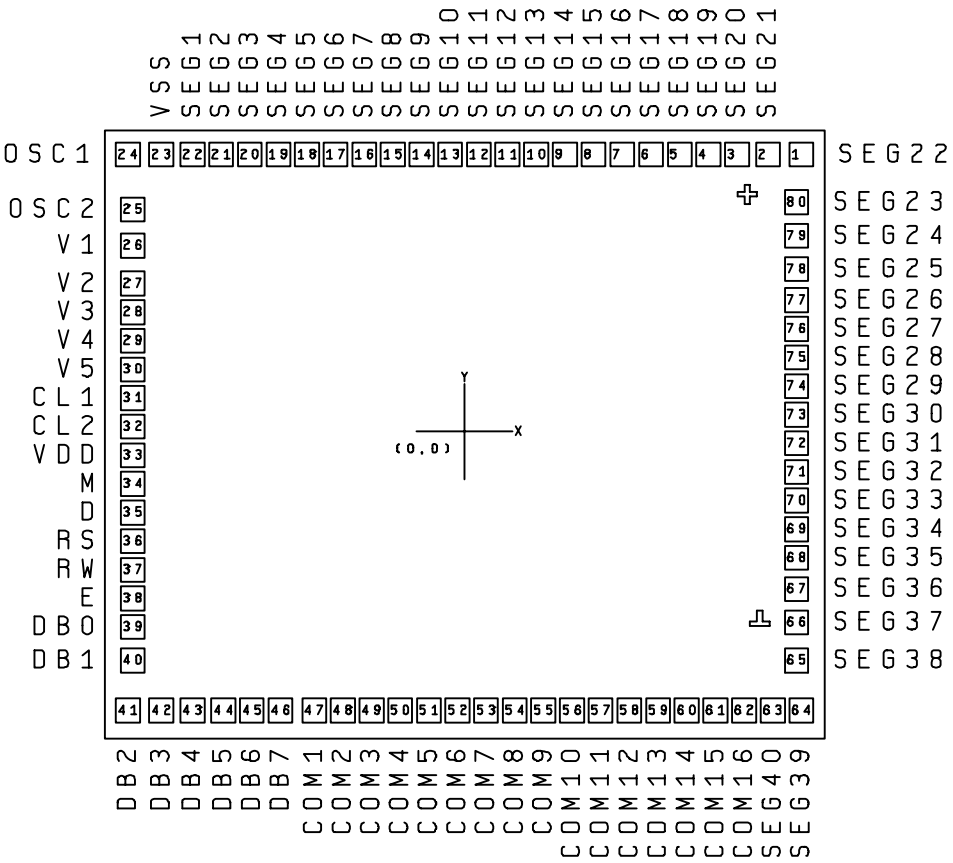

Chip Size: 3140μm x 2690μm

PAD Size: 94μm x 94μm

This IC substrate should be connected to VDD

Note1: Chip size included scribe line.

Note2: The 0.1μF capacitor between VDD and VSS should be placed to IC as close as possible.

9.2. Ordering Information

Product Number	Package Type
SPLC780C-nnnnV-C	Chip form
SPLC780C-nnnnV-PQ05	Package form - QFP 80L

Note1: Code number (nnnnV) is assigned for customer.

Note2: Code number (nnnn = 0000 - 9999); version (V = A - Z).

9.3. PAD Locations

PAD No.	PAD Name	X	Y	PAD No.	PAD Name	X	Y
1	SEG22	1410	1164	41	DB2	-1410	-1165
2	SEG21	1270	1164	42	DB3	-1272	-1165
3	SEG20	1137	1164	43	DB4	-1140	-1165
4	SEG19	1017	1164	44	DB5	-1013	-1165
5	SEG18	897	1164	45	DB6	-890	-1165
6	SEG17	777	1164	46	DB7	-770	-1165
7	SEG16	657	1164	47	COM1	-637	-1165
8	SEG15	537	1164	48	COM2	-517	-1165
9	SEG14	417	1164	49	COM3	-397	-1165
10	SEG13	297	1164	50	COM4	-277	-1165
11	SEG12	177	1164	51	COM5	-157	-1165
12	SEG11	57	1164	52	COM6	-37	-1165
13	SEG10	-63	1164	53	COM7	83	-1165
14	SEG9	-183	1164	54	COM8	203	-1165
15	SEG8	-303	1164	55	COM9	323	-1165
16	SEG7	-423	1164	56	COM10	443	-1165
17	SEG6	-543	1164	57	COM11	563	-1165
18	SEG5	-663	1164	58	COM12	683	-1165
19	SEG4	-783	1164	59	COM13	803	-1165
20	SEG3	-903	1164	60	COM14	923	-1165
21	SEG2	-1023	1164	61	COM15	1043	-1165
22	SEG1	-1143	1164	62	COM16	1163	-1165
23	VSS	-1271	1164	63	SEG40	1283	-1165
24	OSC1	-1411	1164	64	SEG39	1410	-1165
25	OSC2	-1391	932	65	SEG38	1390	-963
26	V1	-1391	784	66	SEG37	1390	-802
27	V2	-1391	624	67	SEG36	1390	-662
28	V3	-1391	504	68	SEG35	1390	-532
29	V4	-1391	384	69	SEG34	1390	-412
30	V5	-1391	264	70	SEG33	1390	-292
31	CL1	-1391	144	71	SEG32	1390	-172
32	CL2	-1391	24	72	SEG31	1390	-52
33	VDD	-1391	-96	73	SEG30	1390	68
34	M	-1391	-216	74	SEG29	1390	188
35	D	-1391	-336	75	SEG28	1390	308
36	RS	-1391	-456	76	SEG27	1390	428
37	RW	-1391	-576	77	SEG26	1390	548
38	E	-1391	-696	78	SEG25	1390	683
39	DB0	-1391	-816	79	SEG24	1390	818
40	DB1	-1391	-955	80	SEG23	1390	963

9.4. Package Configuration

QFP 80L Top View

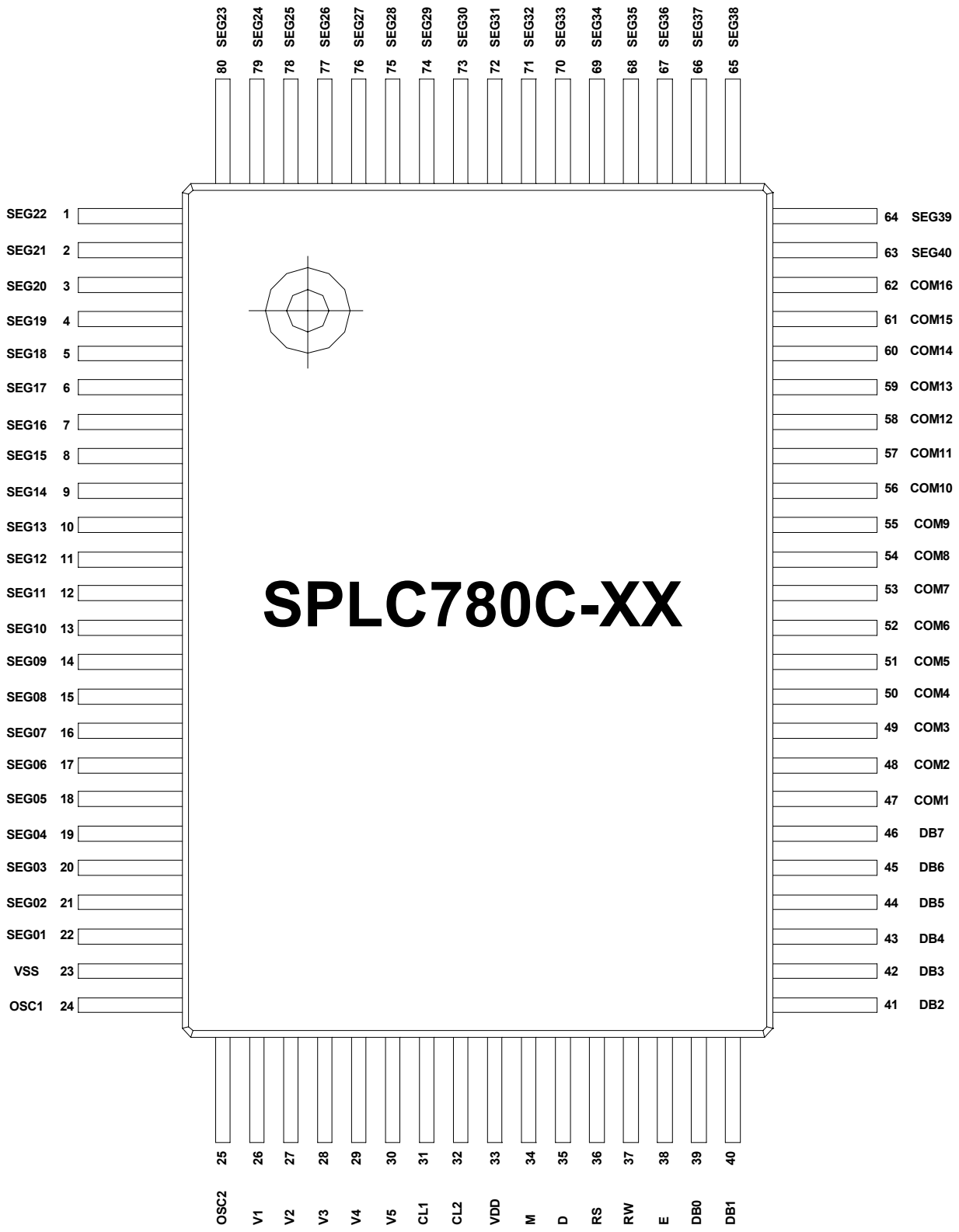

9.5. Package Information

QFP 80L Outline Dimensions

Unit: Millimeter

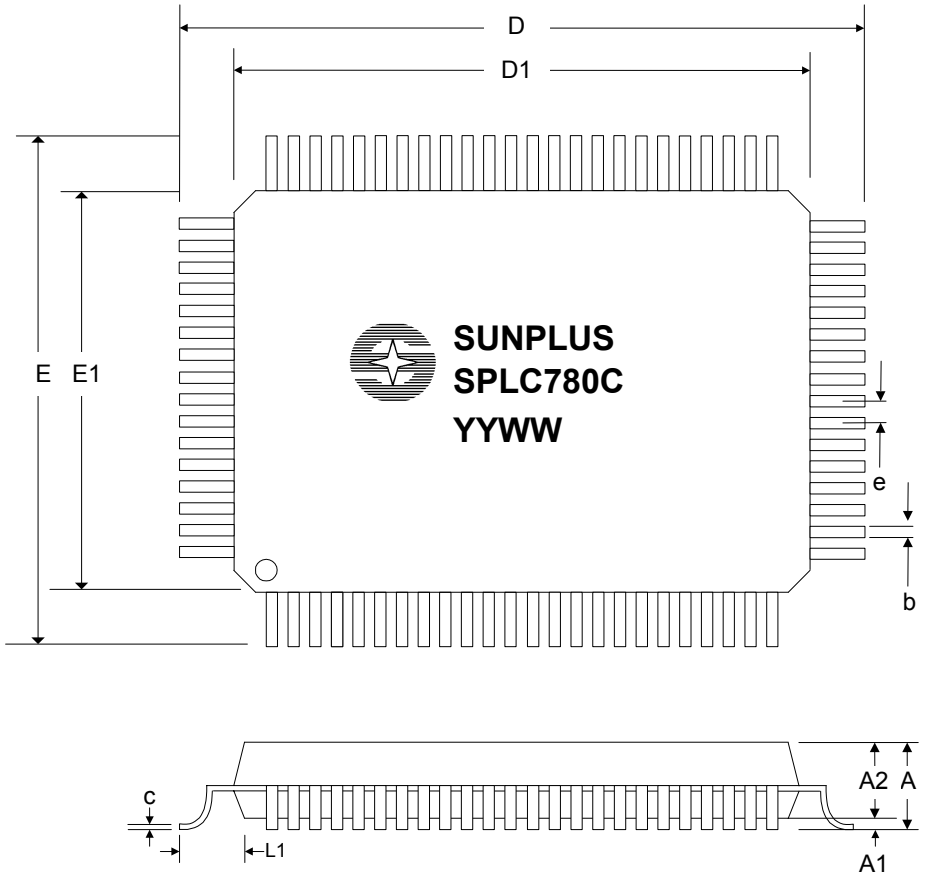

Symbol	Min.	Nom.	Max.	Unit
D		23.20 REF		Millimeter
D1		20.00 REF		Millimeter
E		17.20 REF		Millimeter
E1		14.00 REF		Millimeter
e		0.80 REF		Millimeter
b	0.30	0.35	0.45	Millimeter
A	-	-	3.40	Millimeter
A1	0.25	-	-	Millimeter
A2	2.50	2.72	2.90	Millimeter
c	0.11	0.15	0.23	Millimeter
L1		1.60 REF		Millimeter

10. DISCLAIMER

The information appearing in this publication is believed to be accurate.

Integrated circuits sold by Sunplus Technology are covered by the warranty and patent indemnification provisions stipulated in the terms of sale only. SUNPLUS makes no warranty, express, statutory implied or by description regarding the information in this publication or regarding the freedom of the described chip(s) from patent infringement. FURTHER, SUNPLUS MAKES NO WARRANTY OF MERCHANTABILITY OR FITNESS FOR ANY PURPOSE. SUNPLUS reserves the right to halt production or alter the specifications and prices at any time without notice. Accordingly, the reader is cautioned to verify that the data sheets and other information in this publication are current before placing orders. Products described herein are intended for use in normal commercial applications. Applications involving unusual environmental or reliability requirements, e.g. military equipment or medical life support equipment, are specifically not recommended without additional processing by SUNPLUS for such applications. Please note that application circuits illustrated in this document are for reference purposes only.

11. REVISION HISTORY

Date	Revision #	Description	Page
JUN. 04, 2001	0.1	Original	
OCT. 02, 2001	1.0	1. Delete "*PRELIMINARY*" 2. Correct "*8.3 SPLC780C-03*" 3. Add "*8.4 SPLC780C-08*" and "*8.12 SPLC780C-19*"	 32 33, 41
JUL. 09, 2002	1.1	1. Update "*9.2 Ordering Information*" 2. Update "*9.5 Package Information*"	42 45

APPENDIX C: APPLICATION NOTE FOR 3.3V OPERATION

This module can be used with a 3.3v power supply. In order to meet the requirements of V_{LCD}, you must provide a negative voltage source for V_O (pin 3, see Interface Pin Functions (Pg. 10)). You need to drive V_O to below ground (typically -1v or -2v) until the V_{LCD} is met, making display contrast acceptable.

You can supply the negative voltage by one of the following methods:

1. Use an available source for the negative voltage.

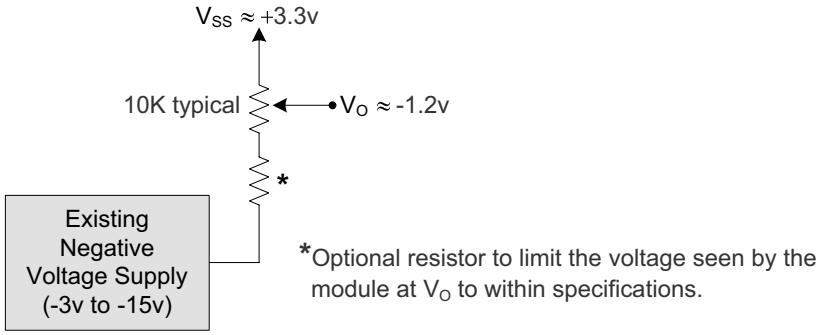

Figure 1. Use Existing Negative Voltage Supply

2. Use a “7660” CMOS switched-capacitor voltage converter or one of the many other available solutions for creating a negative voltage from a positive supply.

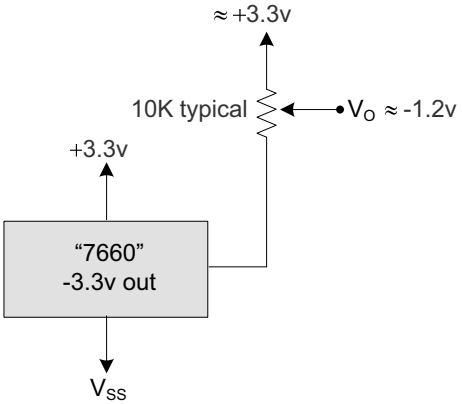

Figure 2. “7660” Switched-Capacitor Voltage Converter

3. Use the circuit in the figure below to create the voltage for V_O by using a PWM (Pulse Width Modulation) output of your microcontroller. This circuit allows the contrast to be adjusted under software control.

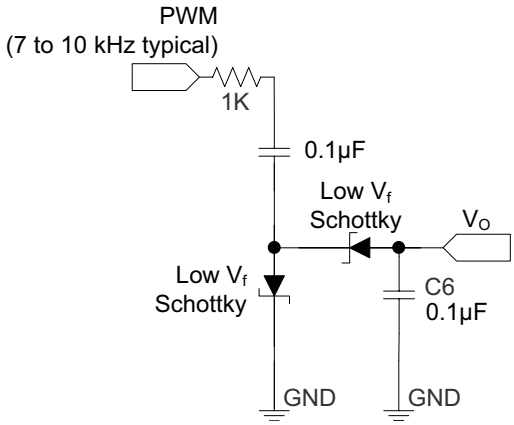

Figure 3. V_O Driving Circuit

Since V_O is pulled up internally by the LCD controller, this circuit will produce positive (≈+1v) V_{LCD} (V_{LCD} = small, contrast is light) for low (≈10%) or high (90%) duty cycles. For duty cycles near 50%, this circuit will produce negative (≈-2v) levels of V_O (V_{LCD} = big, contrast is dark).

4. Replace this module with the module in this series that has an on-board negative voltage generator. (The part number has a "V" at the end of it.)

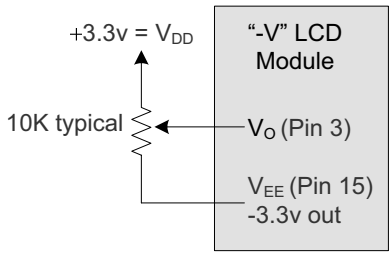

Figure 4. On-Board Negative Voltage Generator